RB Series

High Precision Planetary Gearbox

Indication of Model Numbers

RB090	–	10	–	S2	–	P1	MOTO
Reducer model		Ratio		Output Bearing		Backlash Class	Motor Type
RB050 RB070 RB090 RB120 RB145 RB180 RB220		1–Stage 3, 4, 5, 6, 7, 8 9, 10 2–Stage 15, 20, 25, 30, 35 40, 45, 50, 60, 70 80, 90, 100		S2: Standard (Keyway) N: Solid Output Shaft(No Keyway) H: Output for holes		P0: High precision backlash P1: Precision backlash P2: Standard backlash	Motor Brand & Model No.

The gearbox matching motor needs to be confirmed with following dimensions :

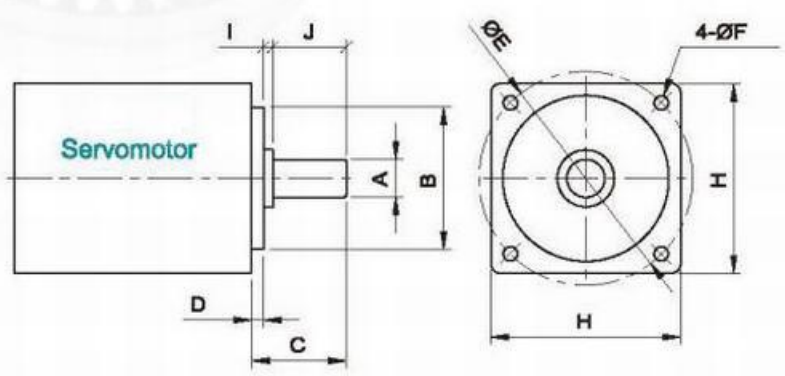

A	B	C	D	E	F	H	I	J

Planetary Reducer Purchase Number

Type	Model	Ratio	Output Shaft Keyway	Backlash Class	MOTOR NO.

RB Reducer Specifications

Specs	Unit	Stage	Ratio	RB050	RB070	RB090	RB120	RB145	RB180	RB220
T_{2N} Rated Output Torque	Nm	1	3	20	55	130	208	342	588	1140
			4	19	50	140	290	542	1050	1700
			5	22	60	160	330	650	1200	2000
			6	20	55	150	310	600	1100	1900
			7	19	50	140	300	550	1100	1800
			8	17	45	120	260	500	1000	1600
			9	14	40	100	230	450	900	1500
			10	14	40	100	230	450	900	1500
		2	15	20	55	130	208	342	588	1140
			20	19	50	140	290	542	1050	1700
			25	22	60	160	330	650	1200	2000
			30	20	55	150	310	600	1100	1900
			35	19	50	140	300	550	1100	1800
			40	17	45	120	260	500	1000	1600
			45	14	40	100	230	450	900	1500
			50	22	60	160	330	650	1200	2000
			60	20	55	150	310	600	1100	1900
			70	19	50	140	300	550	1100	1800
			80	17	45	120	260	500	1000	1600
			90	14	40	100	230	450	900	1500
			100	14	40	100	230	450	900	1500
T_{2NOT}[1]/ Max.Output Torque	Nm	1,2	3~100	3Times of Nominal Output Torque						
n_{1N}/Rated Input Speed	rpm	1,2	3~100	5000	5000	4000	4000	3000	3000	2000
n_{1B}/Max.Input Speed	rpm	1,2	3~100	10000	10000	8000	8000	6000	6000	4000
Micro Backlash P0	arcmin	1	3~10	≤1	≤1	≤1	≤1	≤1	≤1	≤1
		2	12~100	≤3	≤3	≤3	≤3	≤3	≤3	≤3
Precision Backlash P1	arcmin	1	3~10	≤3	≤3	≤3	≤3	≤3	≤3	≤3
		2	12~100	≤5	≤5	≤5	≤5	≤5	≤5	≤5
Precision Backlash P2	arcmin	1	3~10	≤5	≤5	≤5	≤5	≤5	≤5	≤5
		2	12~100	≤7	≤7	≤7	≤7	≤7	≤7	≤7
Torsional Rigidity	Nm/arcmin	1,2	3~100	3	7	14	25	50	145	225
F_{2rB}[2] / Max.Radial Force	N	1,2	3~100	780	1530	3250	6700	9400	14500	50000
F_{2a1B}[2] / Max.Axial Force	N	1,2	3~100	390	765	1625	3350	4700	7250	25000
Service Life	hr	1,2	3~100	20000h						
η /Efficiency	%	1	3~10	≥97%						
		2	15~100	≥94%						
Weight	kg	1	3~10	0.5	1.3	3.3	7.8	15	28	52
		2	15~100	0.8	1.48	3.9	9.6	18.9	33	66
Operating Temperature	℃	1,2	3~100	(-15℃ ~ +90℃)						
Lubrication		1,2	3~100	Synthetic Grease						
Protection Class		1,2	3~100	IP65						
Mounting Position		1,2	3~100	Any Direction						
n1=3000rpm Noise Level	dB(A)	1,2	3~100	≤56	≤58	≤60	≤63	≤65	≤67	≤70

Reducer Rotary Inertia

Specs	Unit	Stage	Ratio	RB050	RB070	RB090	RB120	RB145	RB180	RB220
J1 Rotary Inertia	$kg.cm^2$	1	3	0.03	0.16	0.61	3.25	9.21	28.98	69.61
			4	0.03	0.14	0.48	2.74	7.54	23.67	54.37
			5	0.03	0.13	0.47	2.71	7.42	23.29	53.27
			6	0.03	0.13	0.45	2.65	7.25	22.75	51.72
			7	0.03	0.13	0.45	2.62	7.14	22.48	50.97
			8	0.03	0.13	0.44	2.58	7.07	22.59	50.84
			9	0.03	0.13	0.44	2.57	7.04	22.53	50.63
			10	0.03	0.13	0.44	2.57	7.03	22.51	50.56
		2	12–40	0.03	0.03	0.13	0.47	2.71	7.42	23.29
			50–100	0.03	0.03	0.13	0.44	2.57	7.03	22.51

1. Ratio (i=Nin/Nout) 2. When output speed is 100rpm, acting on the output shaft center position
3. The Max. acceleration torque T2B=60% of T2NOT, continuous operation, service life is 10000hrs

SERVOBOX Planetary Reducers

MODEL: RB

1-Stage

Ratio: 3, 4, 5, 6, 7, 8, 9, 10

Dimensions:

Output

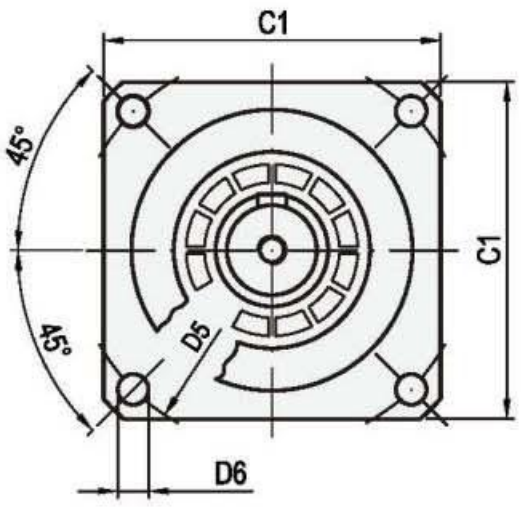

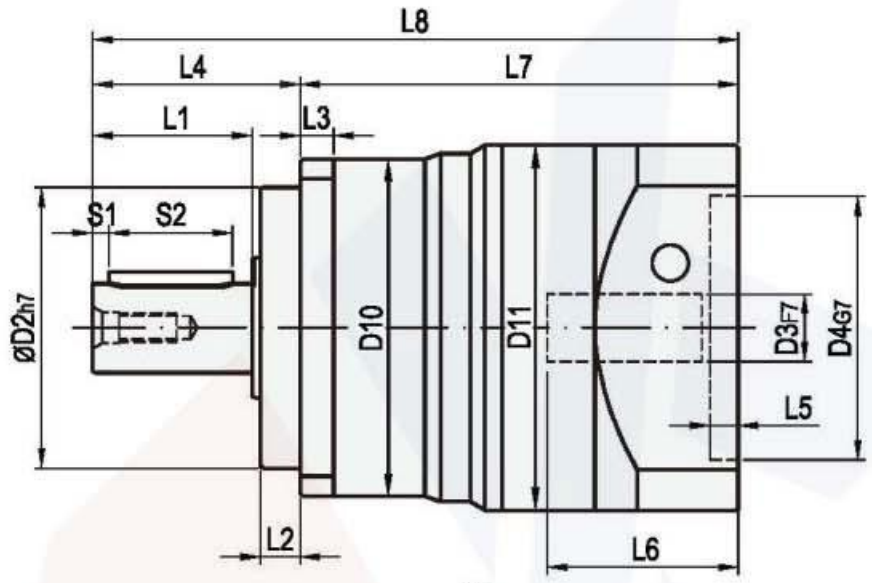

Input

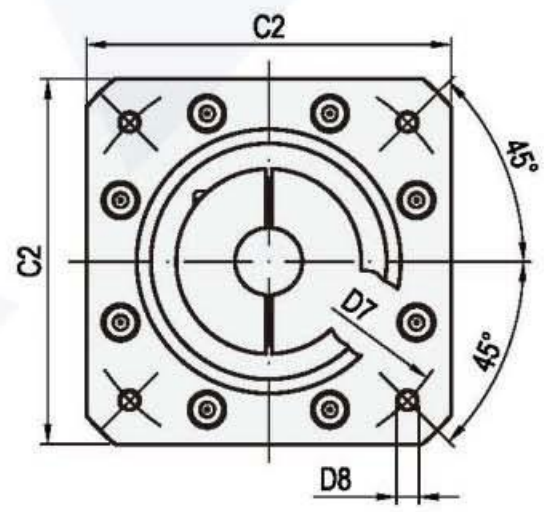

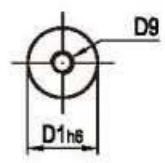

Output shaft type N

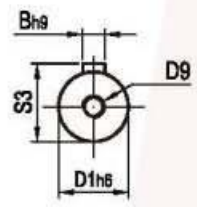

Output shaft type S2

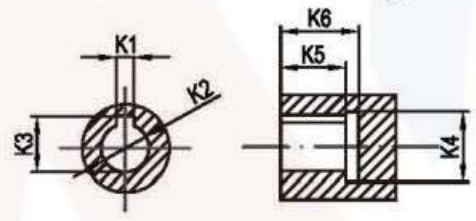

Output hole type H

Unit:mm

	Code \ Model	RB050-L1	RB070-L1	RB090-L1	RB120-L1	RB145-L1	RB180-L1	RB220-L1
A	D1	ϕ13	ϕ16	ϕ22	ϕ32	ϕ40	ϕ55	ϕ75
	D2	ϕ35	ϕ50	ϕ80	ϕ110	ϕ130	ϕ160	ϕ180
	D3	ϕ8 (ϕ6.35-11)	ϕ14 (ϕ11-19)	ϕ19 (ϕ16-24)	ϕ22 (ϕ19-35)	ϕ24 (ϕ22-35)	ϕ35 (ϕ35-42)	ϕ42 (ϕ35-55)
	D4	ϕ30 (ϕ30-50)	ϕ50 (ϕ50-ϕ70)	ϕ70 (ϕ70-ϕ110)	ϕ110 (ϕ114.3)	ϕ110 (ϕ114.3)	ϕ114.3 (ϕ114.3-200)	ϕ180 (ϕ114.3-200)
	D5	ϕ50	ϕ70	ϕ100	ϕ130	ϕ165	ϕ215	ϕ250
	D6	4-ϕ3.4	4-ϕ5.5	4-ϕ7	4-ϕ9	4-ϕ11	4-ϕ13	4-ϕ17
	D7	ϕ46 (ϕ45-70)	ϕ70 (ϕ70-ϕ90)	ϕ90 (ϕ90-145)	ϕ145 (ϕ145-200)	ϕ145 (ϕ145-200)	ϕ200 (ϕ200-235)	ϕ215 (ϕ200-235)
	D8	4-M4(M3-M5)	4-M5 (M4-M6)	4-M6 (M5-M8)	4-M8 (M8-M12)	4-M8 (M8-M12)	4-M12	4-M12
	D9	M4X0.7P	M5X0.8P	M8X1.25P	M12X1.75P	M16X2P	M20X2.5P	M20X2.5P
	D10	ϕ42	ϕ60	ϕ87	ϕ114.5	ϕ142	ϕ180	ϕ218
	D11	ϕ46	ϕ65	ϕ90	ϕ118	ϕ150	ϕ184	ϕ225.5
B	L1	19.5	28.5	36.5	51	79	82	105
	L2	5.5	7	10	12	15	20	30
	L3	4	6	8	10	12	15	20
	L4	26	37	48	65	97	105	138
	L5	5	5	7 (7-8)	6 (6-11)	8 (8-11)	7 (7-10)	8 (8-15)
	L6	27.5 (≤32)	34 (≤44)	44 (≤60)	64.5 (≤81.5)	72.5 (≤82)	85 (≤120)	109 (≤119)
	L7	65.5 (65.5-70)	78 (78-88)	98 (98-114)	135 (135-153)	154.5 (154.5-164)	179 (179-214)	220 (220-230)
	L8	91.5 (91.5-96)	115 (115-125)	146 (146-162)	201 (201-218)	251.5 (251.5-261)	284 (284-319)	358 (358-368)
	C1	42	60	90	115	142	180	220
	C2	46(46-60)	65(65-80)	90 (90-130)	130 (130-180)	130 (130-180)	180 (180-220)	200 (200-220)
C	S1	3	3	4	5	5	6	7
	S2	14	22	28	40	65	70	90
	S3	15	18	24.5	35	43	59	79.5
	B	5	5	6	10	12	16	20
	K1	3	4	6	8	10	14	18
	K2	ϕ8	ϕ11	ϕ22	ϕ28	ϕ38	ϕ50	ϕ60
	K3	9.4	12.8	24.5	31.3	41.3	53.8	64.4
	K4	ϕ13	ϕ16	ϕ32	ϕ38	ϕ48	ϕ60	ϕ72
	K5	15	15	20	27	35	43	60
	K6	18	18	24	32	40	50	65

SERVOBOX Planetary Reducers

MODEL：RB

2-Stage
Ratio：15，20，25，30，35，40，45，50，60
70，80，90，100

Dimensions：

Output

Input

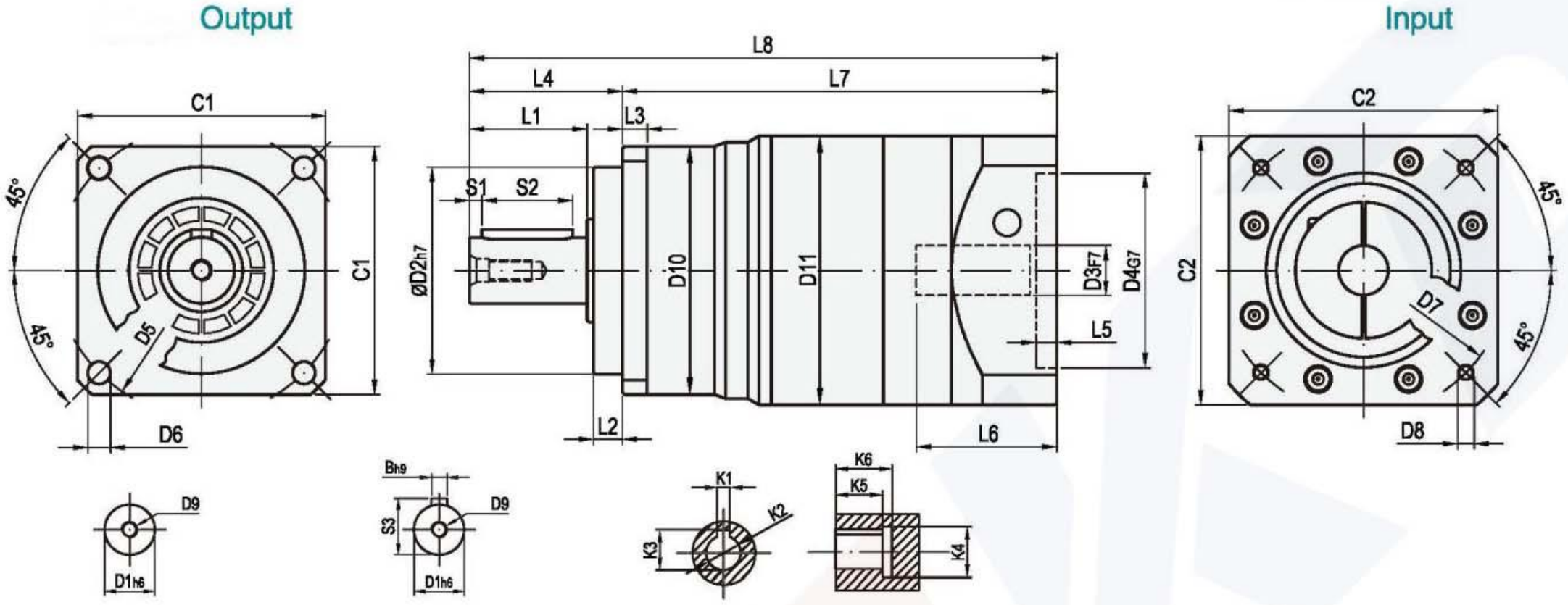

Output shaft type N　　Output shaft type S2　　Output hole type H

Unit:mm

	Code \ Model	RB050-L2	RB070-L2	RB090-L2	RB120-L2	RB145-L2	RB180-L2	RB220-L2
A	D1	ϕ13	ϕ16	ϕ22	ϕ32	ϕ40	ϕ55	ϕ75
	D2	ϕ35	ϕ50	ϕ80	ϕ110	ϕ130	ϕ160	ϕ180
	D3	ϕ8 (ϕ6.35-8)	ϕ14 (ϕ11-14)	ϕ19 (ϕ11-19)	ϕ22 (ϕ16-24)	ϕ24 (ϕ19-35)	ϕ35 (ϕ22-35)	ϕ42 (ϕ35-42)
	D4	ϕ30 (ϕ30-38.1)	ϕ50	ϕ70 (ϕ50-ϕ80)	ϕ110 (ϕ70-110)	ϕ110 (ϕ114.3)	ϕ114.3 (ϕ110-114.3)	ϕ180 (ϕ114.3-200)
	D5	ϕ50	ϕ70	ϕ100	ϕ130	ϕ165	ϕ215	ϕ250
	D6	4-ϕ3.4	4-ϕ5.5	4-ϕ7	4-ϕ9	4-ϕ11	4-ϕ13	4-ϕ17
	D7	ϕ46 (ϕ45-66.67)	ϕ70	ϕ90 (ϕ70-100)	ϕ145 (ϕ90-145)	ϕ145 (ϕ145-200)	ϕ200 (ϕ145-200)	ϕ215 (ϕ200-235)
	D8	4-M4(M3)	4-M5 (M4)	4-M6 (M4-M6)	4-M8 (M5-M8)	4-M8 (M8-M12)	4-M12 (M8-M12)	4-M12
	D9	M4X0.7P	M5X0.8P	M8X1.25P	M12X1.75P	M16X2P	M20X2.5P	M20X2.5P
	D10	ϕ42	ϕ60	ϕ87	ϕ114.5	ϕ142	ϕ180	ϕ218
	D11	ϕ46	ϕ65	ϕ90	ϕ118	ϕ150	ϕ184	ϕ225.5
B	L1	19.5	28.5	36.5	51	79	82	105
	L2	5.5	7	10	12	15	20	30
	L3	4	6	8	10	12	15	20
	L4	26	37	48	65	97	105	138
	L5	5	5	5	8 (7-8)	11 (6-11)	8 (8-11)	8 (7-10)
	L6	27.5	34	34 (≤44)	44 (≤60)	64.5 (≤81.5)	72.5 (≤82	85 (≤120)
	L7	86	105	124.5 (114.5-124.5)	165.5 (149.5-165.5)	206 (189-206)	235 (225.5-235)	269 (264-299)
	L8	112	142	172.5 (162.5-172.5)	230.5 (214.5-230.5)	303 (286-303)	340 (330.5-340)	407 (402-437)
	C1	42	60	90	115	142	180	220
	C2	46 (46-57)	65	65 (65-86)	90 (90-130)	130 (130-180)	150 (150-180)	200 (180-220)
C	S1	3	3	4	5	5	6	7
	S2	14	22	28	40	65	70	90
	S3	15	18	24.5	35	43	59	79.5
	B	5	5	6	10	12	16	20
	K1	3	4	6	8	10	14	18
	K2	ϕ8	ϕ11	ϕ22	ϕ28	ϕ38	ϕ50	ϕ60
	K3	9.4	12.8	24.5	31.3	41.3	53.8	64.4
	K4	ϕ13	ϕ16	ϕ32	ϕ38	ϕ48	ϕ60	ϕ72
	K5	15	15	20	27	35	43	60
	K6	18	18	24	32	40	50	65

MB Series

High Precision High Torque Planetary Gearbox

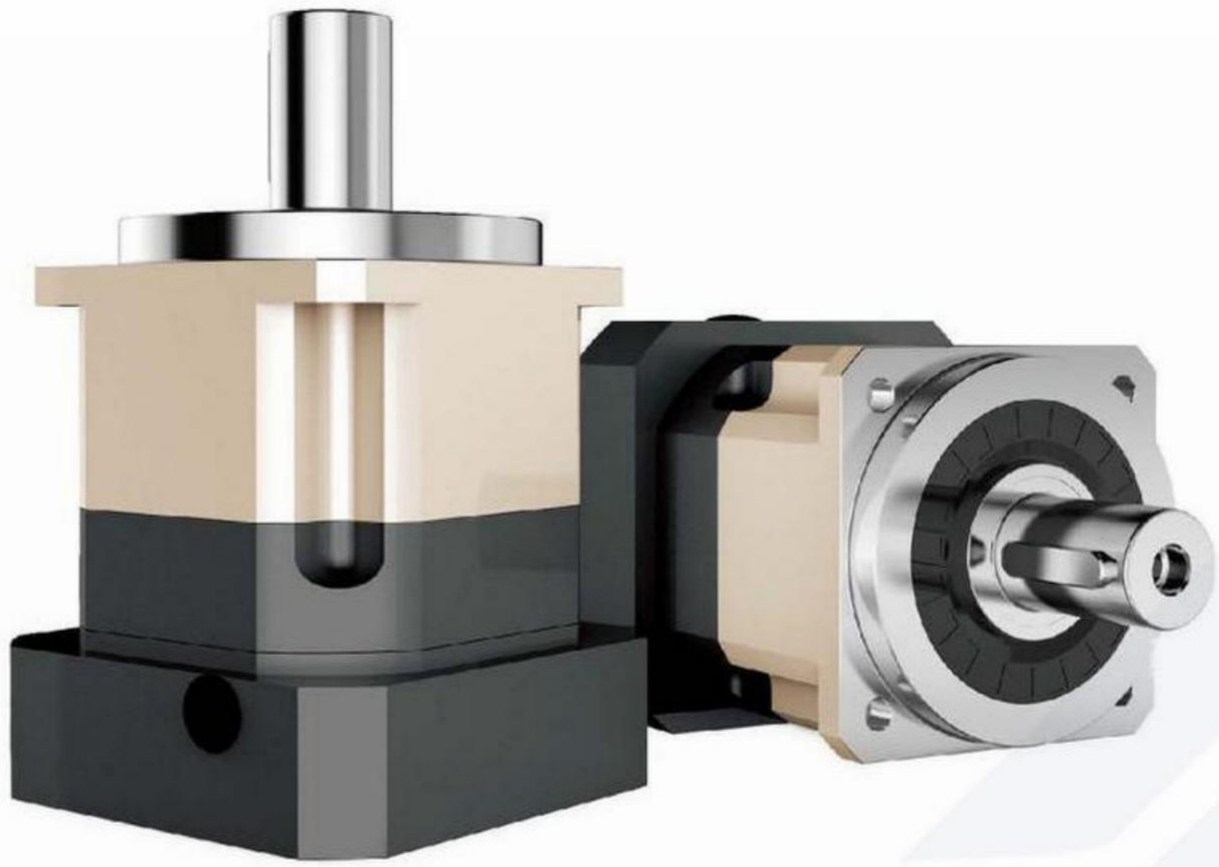

Indication of Model Numbers

MB090	–	10	–	S2	–	P1	MOTO
Reducer model MB042, MB060,MB090, MB120,MB142,MB180, MB220,MB270, MB330		Ratio 1–Stage 3, 4, 5, 6, 7,8, 9, 10 2–Stage 12, 15, 16, 20, 25 28, 30, 35, 40, 50 70, 80, 100 3–Stage 125 ~1000		Output Bearing S2: Standard (Keyway) N: Solid Output Shaft(No Keyway) H: Output for holes		Backlash Class P0: High precision backlash P1: Precision backlash P2: Standard backlash	Motor Type Motor Brand & Model

The gearbox matching motor needs to be confirmed with following dimensions :

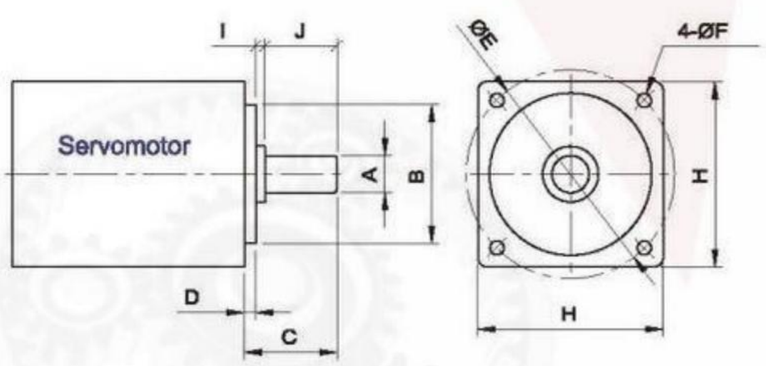

A	B	C	D	E	F	H	I	J

Planetary Reducer Purchase Number

Type	Model	Ratio	Output Shaft Keyway	Backlash Class	MOTOR NO.

Reducer Specifications

Specs	Unit	Stage	Ratio	MB040	MB062	MB090	MB120	MB142	MB180	MB220
Rated Output Torque T2N	Nm	1	3	19	56	148	280	520	1020	1550
			4	20	55	160	330	580	1280	2160
			5	21	58	159	330	580	1250	2100
			6	16	48	120	240	410	980	1350
			7	19	50	148	300	530	1030	1580
			8	13	45	130	230	450	880	1260
			9	12	40	100	220	410	880	1450
			10	15	46	125	260	475	950	1530
		2	12	18	52	155	300	530	1100	1750
			15	18	53	150	280	550	1050	1650
			16	20	53	158	320	580	1200	2050
			20	20	52	155	320	580	1200	2050
			25	19	52	158	320	580	1200	2000
			28	19	50	150	300	550	1100	1850
			30	18	49	145	390	500	1050	1600
			35	17	48	155	290	500	1020	1500
			40	18	48	150	290	530	1100	1350
			50	18	50	145	290	530	1000	1300
			70	16	50	140	280	490	1000	1200
			80	10	43	110	230	410	960	980
			100	10	43	120	260	450	950	1100
Max. Output Torque	Nm	1,2	3~100	3Times of Nominal Output Torque						
Rated Input Speed	rpm	1,2	3~100	4000	4000	4000	3500	3000	2000	2000
Max. Input Speed	rpm	1,2	3~100	6000	6000	6000	5500	4500	4500	4000
Micro Backlash P0	arcmin	1	3~10	≤1	≤1	≤1	≤1	≤1	≤1	≤1
		2	12~100	≤2	≤2	≤2	≤2	≤2	≤2	≤2
Precision Backlash P1	arcmin	1	3~10	≤3	≤3	≤3	≤3	≤3	≤3	≤3
		2	12~100	≤4	≤4	≤4	≤4	≤4	≤4	≤4
Standard Backlash P2	arcmin	1	3~10	≤5	≤5	≤5	≤5	≤5	≤5	≤5
		2	12~100	≤6	≤6	≤6	≤6	≤6	≤6	≤6
Torsional Rigidity	Nm/arcmin	1,2	3~100	3	7	12	25	50	140	210
Max. Radial Force	N	1,2	3~100	780	1300	3200	6750	9400	14500	50000
Max. Axial Force	N	1,2	3~100	330	700	1580	3300	4700	7200	28000
Service Life	hr	1,2	3~100	21000h						
Efficiency	%	1	3~10	≥97%						
		2	12~100	≥94%						
Weight	kg	1	3~10	0.5	1.3	3.7	7.8	15	29	52
		2	12~100	0.8	1.48	4.1	9.6	18.9	33	66
Operating Temperature	℃	1,2	3~100	(-15℃ ~ +90℃)						
Lubrication		1,2	3~100	Synthetic Grease						
Protection Class		1,2	3~100	IP65						
Mounting Position		1,2	3~100	Any Direction						
Noise Level n1=3000rpm, no load	dB(A)	1,2	3~100	≤63	≤63	≤63	≤65	≤65	≤70	≤70

Reducer Rotary Inertia

Specs	Unit	Stage	Ratio	MB044	MB062	MB090	MB120	MB142	MB180	MB220
J1 Moment of Inertia	$kg.cm^2$	1	3	0.03	0.16	0.61	3.25	9.21	28.98	69.61
			4	0.03	0.14	0.48	2.74	7.54	23.67	54.37
			5	0.03	0.13	0.47	2.71	7.42	23.29	53.27
			6	0.03	0.13	0.45	2.65	7.25	22.75	51.72
			7	0.03	0.13	0.45	2.62	7.14	22.48	50.97
			8	0.03	0.13	0.44	2.58	7.07	22.59	50.84
			9	0.03	0.13	0.44	2.57	7.04	22.53	50.63
			10	0.03	0.13	0.44	2.57	7.03	22.51	50.56
		2	12–40	0.03	0.03	0.13	0.47	2.71	7.42	23.29
			50–100	0.03	0.03	0.13	0.44	2.57	7.03	22.51

1. The Max. acceleration torque T2B=60% of T2NOT 2. When output speed is 100rpm, inertia acts on the output shaft center position.
3. 3-stage big ratios are not in the above table. There is shaft lengthening and enlarging design. Please tell sales person if you need it.

SERVOBOX Planetary Reducers

Model: MB

1-Stage

Ratio: 3, 4, 5, 6, 7, 8, 9, 10

Dimensions:

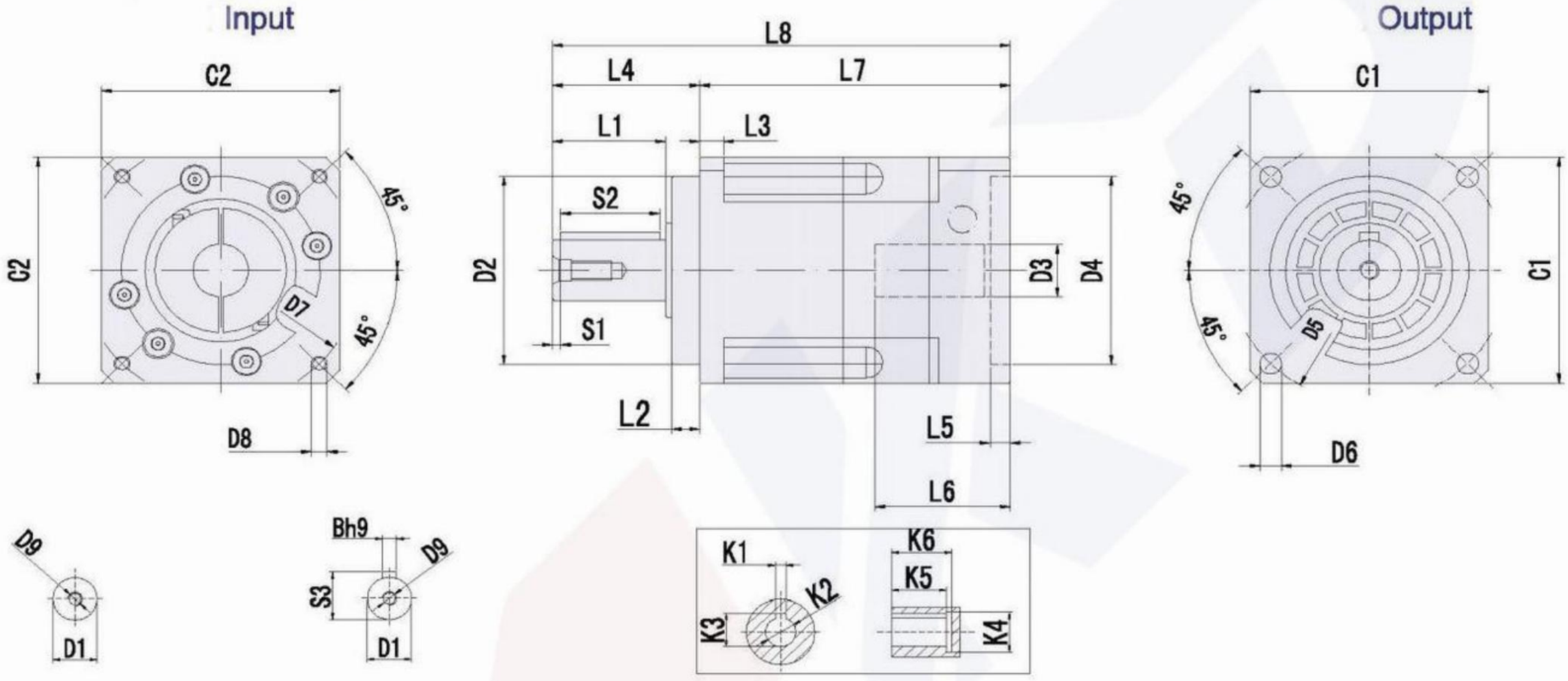

Output shaft type N　　Output shaft type S2　　Output hole type H

Unit:mm

	Code \ Model	MB042-L1	MB060-L1	MB090-L1	MB120-L1	MB142-L1	MB180-L1	MB220-L1
A	D1	ϕ13	ϕ16	ϕ22	ϕ32	ϕ40	ϕ55	ϕ75
	D2	ϕ35	ϕ50	ϕ80	ϕ110	ϕ130	ϕ160	ϕ180
	D3	ϕ8(≤11)	ϕ14(≤14)	ϕ19(≤24)	ϕ24(≤32)	ϕ35(≤42)	ϕ38(≤50)	ϕ55(≤55)
	D4	ϕ30(30–50)	ϕ50(30–70)	ϕ70(50–110)	ϕ110(50–130)	ϕ114.3(95–180)	ϕ180(95–180)	ϕ215(180–255)
	D5	ϕ50	ϕ70	ϕ100	ϕ130	ϕ165	ϕ215	ϕ250
	D6	4–ϕ3.4	4–ϕ5.5	4–ϕ6.6	4–ϕ9	4–ϕ11	4–ϕ13	4–ϕ17
	D7	ϕ46(22–70)	ϕ70(45–90)	ϕ90(70–145)	ϕ145(70–145)	ϕ200(90–215)	ϕ200(90–300)	ϕ235(200–300)
	D8	(4–M3X8L)	(4–M5X10L)	(4–M6X12L)	(4–M8X25L)	(4–M12X30L)	(4–M12X30L)	(4–M12X30L)
	D9	M4X0.7P	M5X0.8P	M8X1.25P	M12X1.75P	M16X2.0P	M20X2.5P	M20X2.5P
B	L1	19	28.5	36.5	51	79	82	105
	L2	5.5	7	10	12	15	20	30
	L3	4	6	8	10	12	15	20
	L4	26	37	48	65	97	105	138
	L5	(4)	(5)	(7)	(11)	(7)	(7)	(12.5)
	L6	30	34	45	65	67.5	85	105
	L7	(65.5)	(78)	(99)	(135)	(150)	(182)	(226)
	L8	(91.5)	(115)	(147)	(200)	(247)	(287)	(365)
	C1	□42	□60	□90	□115	□142	□180	□220
	C2	(□42)	(□60)	(□90)	(□130)	(□142)	(□180)	(□220)
C	S1	2	2	3	5	5	5	7
	S2	16	25	32	40	65	70	90
	S3	15	18	24.5	35	43	59	79
	B	5	5	6	10	12	16	20
	K1	3	4	6	8	10	14	16
	K2	ϕ8	ϕ11	ϕ22	ϕ28	ϕ38	ϕ50	ϕ60
	K3	9.2	12.7	25	31.3	42	53.8	64.4
	K4	ϕ13	ϕ16	ϕ32	ϕ38	ϕ48	ϕ60	ϕ72
	K5	15	15	20	27	35	43	60
	K6	18	18	24	32	40	50	65

SERVOBOX Planetary Reducers

Model: MB

2-Stage
Ratio: 12, 15, 16, 20, 25, 28, 30, 35, 40, 50, 70, 80, 100

Dimensions:

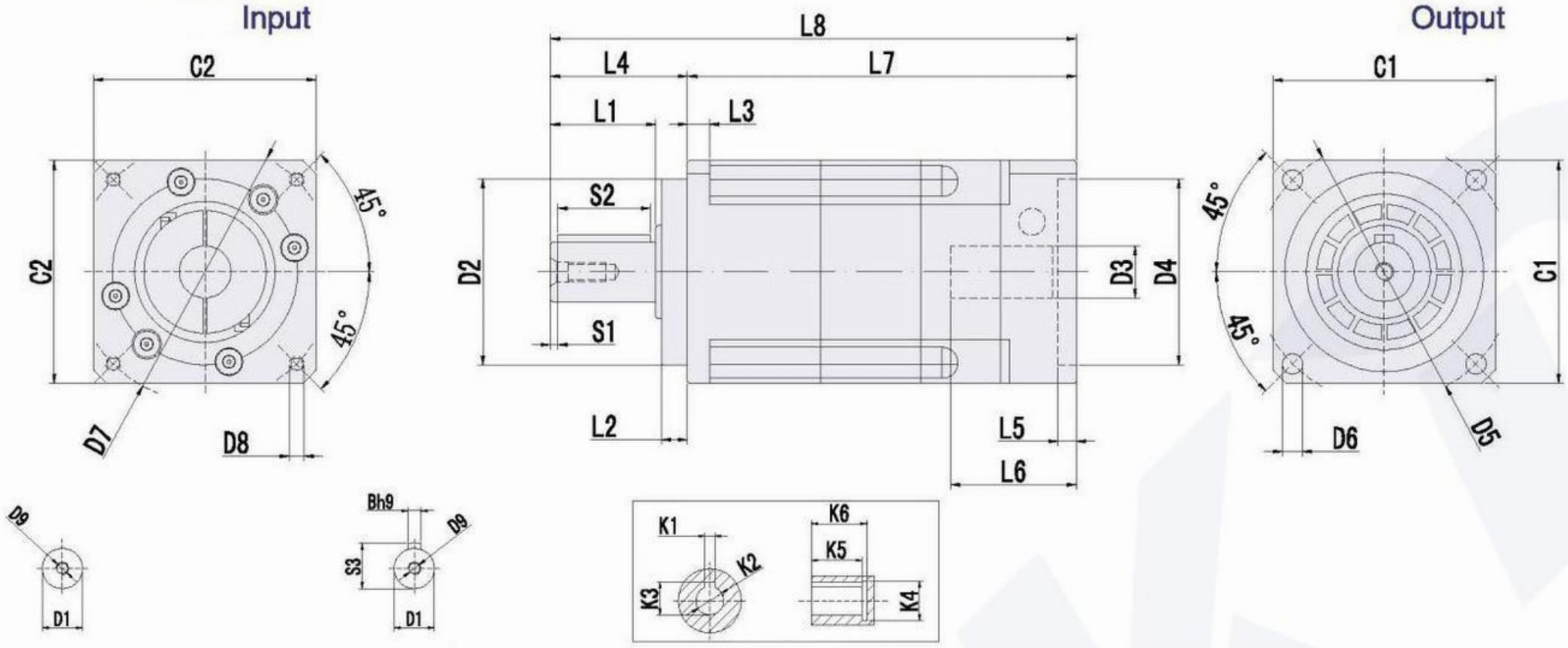

Output shaft type N Output shaft type S2 Output hole type H

Unit:mm

	Model / Code	MB042-L2	MB060-L2	MB090-L2	MB120-L2	MB142-L2	MB180-L2	MB220-L2
A	D1	ϕ13	ϕ16	ϕ22	ϕ32	ϕ40	ϕ55	ϕ75
	D2	ϕ35	ϕ50	ϕ80	ϕ110	ϕ130	ϕ160	ϕ180
	D3	ϕ8(≤11)	ϕ14(≤14)	ϕ19(≤24)	ϕ24(≤32)	ϕ35(≤42)	ϕ38(≤50)	ϕ55(≤55)
	D4	ϕ30(30–50)	ϕ50(30–70)	ϕ70(50–110)	ϕ110(50–130)	ϕ114.3(95–180)	ϕ180(95–180)	ϕ215(180–255)
	D5	ϕ50	ϕ70	ϕ100	ϕ130	ϕ165	ϕ215	ϕ250
	D6	4–ϕ3.4	4–ϕ5.5	4–ϕ6.6	4–ϕ9	4–ϕ11	4–ϕ13	4–ϕ17
	D7	ϕ46(22–70)	ϕ70(45–90)	ϕ90(70–145)	ϕ145(70–145)	ϕ200(90–215)	ϕ200(90–300)	ϕ235(200–300)
	D8	(4–M3X8L)	(4–M5X10L)	(4–M6X12L)	(4–M8X25L)	(4–M12X30L)	(4–M12X30L)	(4–M12X30L)
	D9	M4X0.7P	M5X0.8P	M8X1.25P	M12X1.75P	M16X2.0P	M20X2.5P	M20X2.5P
B	L1	19	28.5	36.5	51	79	82	105
	L2	5.5	7	10	12	15	20	30
	L3	4	6	8	10	12	15	20
	L4	26	37	48	65	97	105	138
	L5	(4)	(5)	(7)	(11)	(7)	(7)	(12.5)
	L6	25	34	45	65	67.5	85	105
	L7	(93)	(117)	(144)	(161)	(196)	(232)	(277)
	L8	(114)	(154)	(192)	(226)	(293)	(337)	(415)
	C1	□42	□60	□90	□115	□142	□180	□220
	C2	(□42)	(□60)	(□90)	(□130)	(□142)	(□180)	(□220)
C	S1	2	2	3	5	5	5	7
	S2	16	25	32	40	65	70	90
	S3	15	18	24.5	35	43	59	79
	B	5	5	6	10	12	16	20
	K1	3	4	6	8	10	14	16
	K2	ϕ8	ϕ11	ϕ22	ϕ28	ϕ38	ϕ50	ϕ60
	K3	9.2	12.7	25	31.3	42	53.8	64.4
	K4	ϕ13	ϕ16	ϕ32	ϕ38	ϕ48	ϕ60	ϕ72
	K5	15	15	20	27	35	43	60
	K6	18	18	24	32	40	50	65

MBL Series

High Precision High Torque Planetary Gearbox

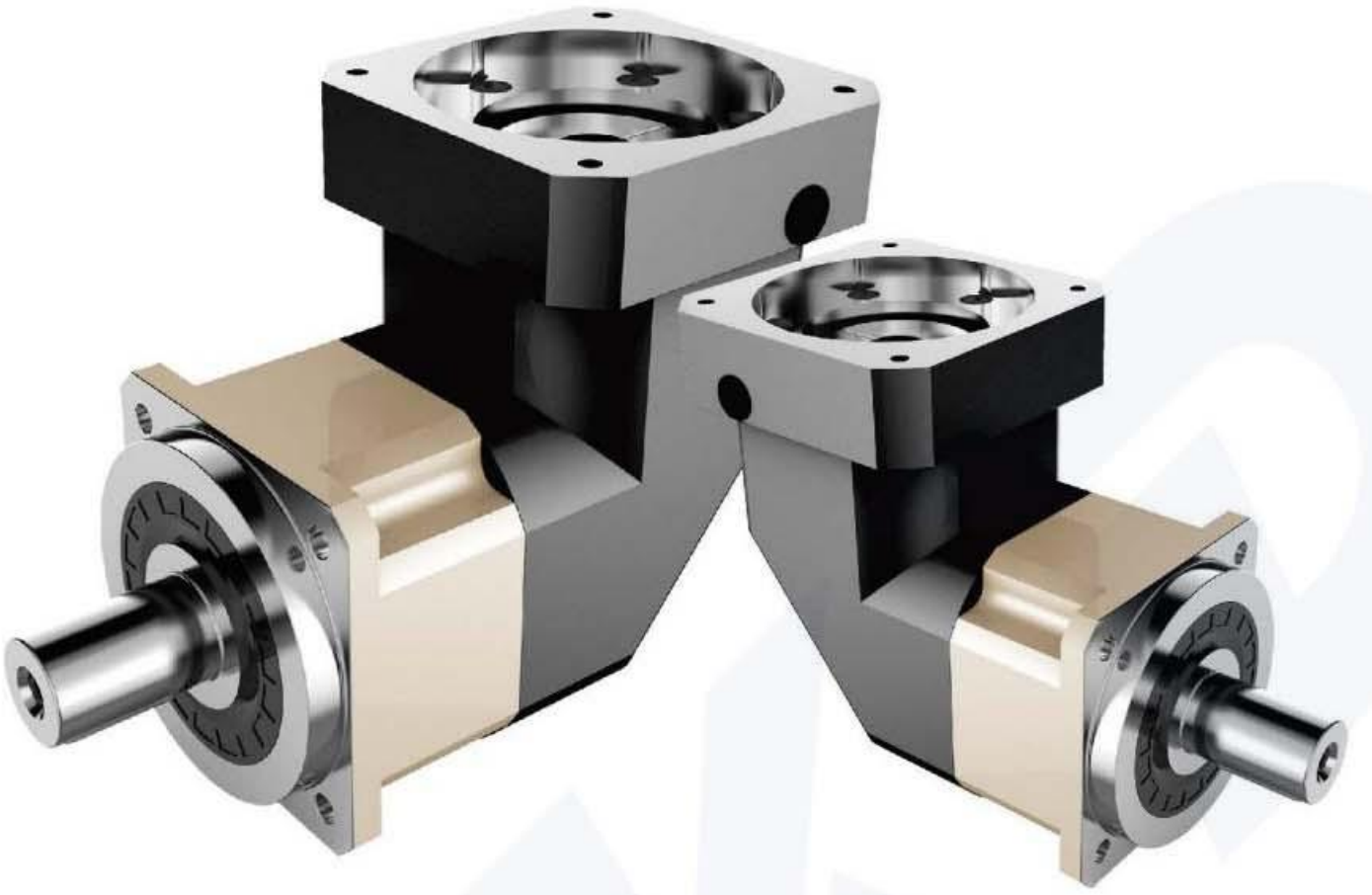

Indication of Model Numbers

MBL090	–	10	–	S2	–	P1	MOTO
Reducer model MBL044, MBL062 MBL090, MBL120 MBL142, MBL180 MBL220, MBL270 MBL330		Ratio 1–Stage 3, 4 , 5, 6, 7, 8, 9 10, 14, 16, 20 2–Stage 15, 20, 25, 30, 35 40, 50, 70, 80 100, 120, 140 160, 180, 200 3–Stage 125 ~1000		Output Bearing S2: Standard (Keyway) N: Solid Output Shaft(No Keyway) H: Output for holes		Backlash Class P0: High precision backlash P1: Precision backlash P2: Standard backlash	Motor Type Motor Brand & Model No. As showing Below

The following motor sizes need to be confirmed to match the corresponding reducer

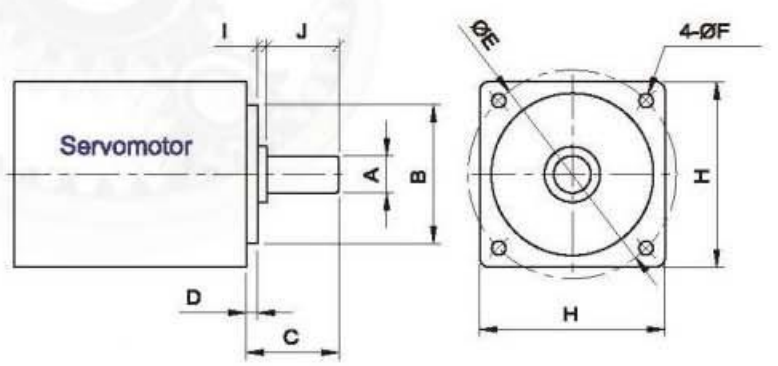

A	B	C	D	E	F	H	I	J

Planetary reducer order number

Type	Model	Ratio	Output Shaft Keyway	Backlash Class	MOTOR NO.

MBL Reducer Specifications

Specs	Unit	Stage	Ratio	MBL042	MBL062	MBL090	MBL120	MBL142	MBL180	MBL220
T_{2N} Rated Output Torque	Nm	1	3	13	50	150	310	550	1100	1860
			4	16	55	153	330	600	1250	1950
			5	15	53	152	325	590	1200	1900
			6	11	45	130	250	450	950	1600
			7	15	50	140	300	540	1050	1760
			8	11	45	110	260	460	960	1550
			9	9	40	100	230	450	900	1500
			10	12	48	128	280	520	1000	1120
			14	13	42	120	265	500	1020	1100
			20	10	42	115	255	500	980	1100
		2	15	13	50	150	300	530	1100	1800
			20	15	52	150	300	530	1150	1800
			25	15	53	150	325	590	1200	1800
			30	13	49	150	310	550	1100	1830
			35	13	50	140	300	540	1100	1800
			40	15	45	140	260	500	1000	1600
			50	15	50	135	230	580	1200	1670
			70	13	50	130	300	520	1100	1600
			80	11	40	100	260	500	1000	1500
			100	10	40	100	230	450	900	1500
			120	—	—	130	310	500	1100	1900
			140	—	—	130	300	530	1100	1800
			160	—	—	120	260	520	1000	1600
			180	—	—	100	230	450	900	1500
			200	—	—	100	230	450	900	1500
T_{2NOT}[1]/ Max.Output Torque	Nm	1,2	3~200	3Times of Nominal Output Torque						
n_{1N}/Rated Input Speed	rpm	1,2	3~200	3000	3000	3000	3000	2500	2000	2000
n_{1B}/Max.Input Speed	rpm	1,2	3~200	6000	6000	6000	5500	4500	4500	4000
Precision Backlash P1	arcmin	1	3~20	≤5	≤5	≤5	≤5	≤5	≤5	≤5
		2	15~200	≤8	≤8	≤8	≤8	≤8	≤8	≤8
Standard Backlash P2	arcmin	1	3~20	≤8	≤8	≤8	≤8	≤8	≤8	≤8
		2	15~200	≤10	≤10	≤10	≤10	≤10	≤10	≤10
Torsional Rigidity	Nm/arcmin	1,2	3~200	3	6	14	25	56	140	220
F_{2rB}[2] / Max.Radial Force	N	1,2	3~200	780	1300	3200	6750	9400	14500	50000
F_{2a1B}[2] / Max.Axial Force	N	1,2	3~200	330	700	1580	3300	4700	7200	28000
Service Life	hr	1,2	3~200	21000 h						
η /Efficiency	%	1	3~20	≥93%						
		2	25~200	≥90%						
Weight	kg	1	3~20	0.9	1.5	6.4	13	24.5	51	83
		2	25~200	1.2	2.1	7.8	14.2	27.5	54	95
Operating Temperature	℃	1,2	3~200	-15℃ ~ +90℃						
Lubrication		1,2	3~200	Synthetic Grease						
Protection Class		1,2	3~200	IP65						
Mounting Position		1,2	3~200	Any Direction						
n1=3000rpm Noise Level	dB(A)	1,2	3~200	≤65	≤65	≤68	≤68	≤70	≤72	≤74

Reducer Rotary Inertia

Specs	Unit	Stage	Ratio	MBL042	MBL060	MBL090	MBL120	MBL142	MBL180	MBL220
J1 Moment of Inertia	$kg.cm^2$	1	3~10	0.09	0.35	2.25	6.84	23.4	68.9	135.4
			14~20	0.03	0.07	1.87	6.25	21.8	65.6	119.8
		2	15~100	0.09	0.09	0.35	2.25	6.84	23.4	68.9
			120~200	—	—	0.31	1.87	6.25	21.8	65.6

1. The Max. acceleration torque T2B=60% of T2NOT 2. When output speed is 100rpm, inertia acts on the output shaft center position.
3. 3-stage big ratios are not in the above table. There is shaft lengthening and enlarging design. Please tell sales person if you need it.

SERVOBOX Planetary Reducers

MODEL：MBL

1-Stage

Ratio：3，4，5，6，7，8，9，10，14，16，20

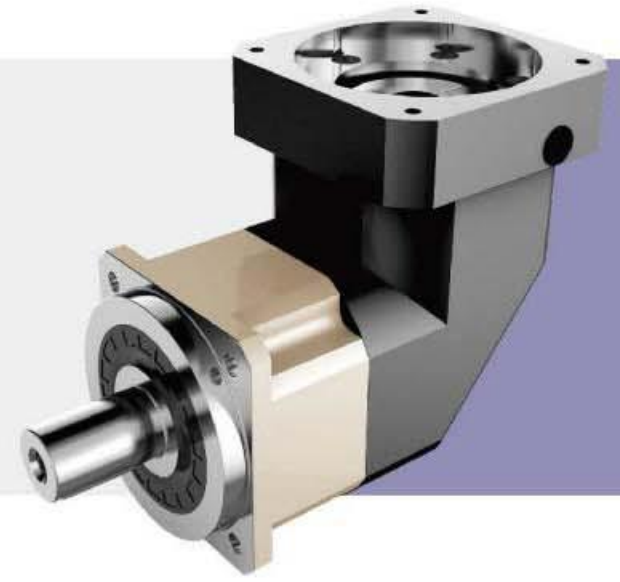

Dimensions：

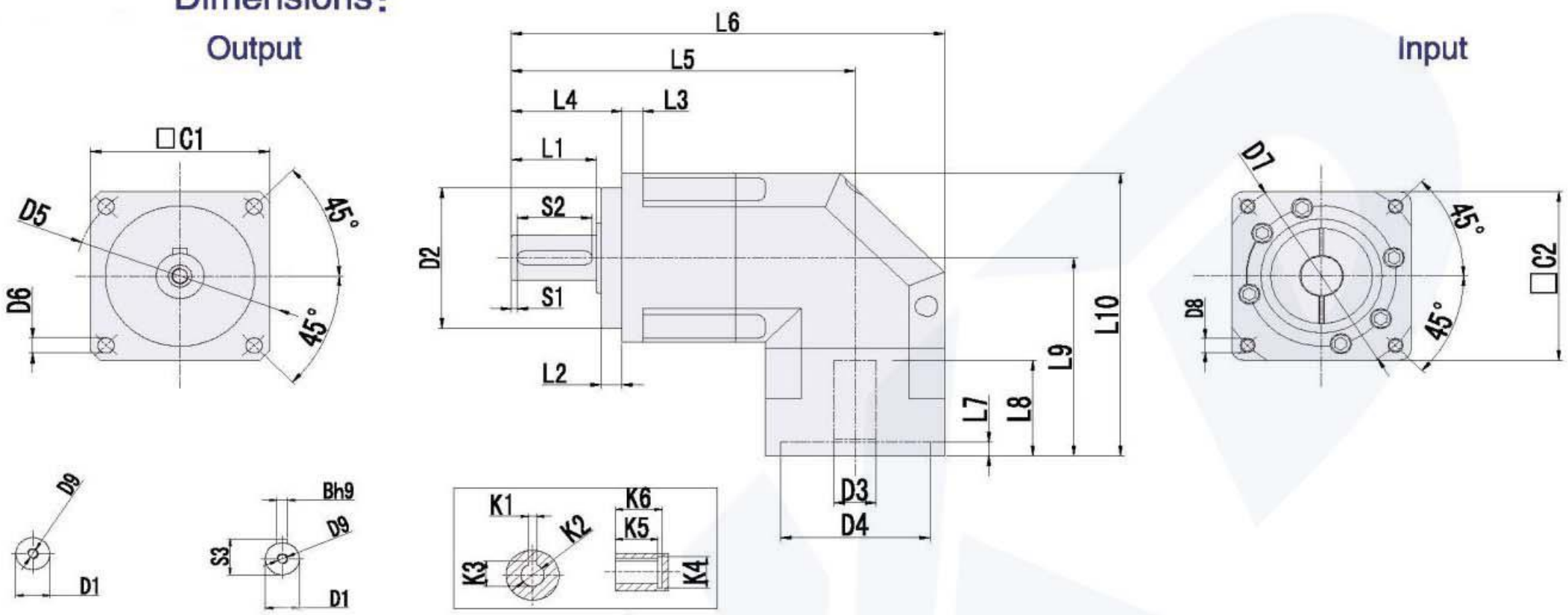

Output shaft type N　　Output shaft type S2　　Output hole type H

Unit:mm

	Code \ Model	MBL042-L1	MBL060-L1	MBL090-L1	MBL120-L1	MBL142-L1	MBL180-L1	BL220-L1
A	D1	ϕ13	ϕ16	ϕ22	ϕ32	ϕ40	ϕ55	ϕ75
	D2	ϕ35	ϕ50	ϕ80	ϕ110	ϕ130	ϕ160	ϕ180
	D3	ϕ8(≤11)	ϕ14(≤14)	ϕ19(≤24)	ϕ24(≤32)	ϕ35(≤42)	ϕ38(≤50)	ϕ55(≤55)
	D4	ϕ30(30-50)	ϕ50(30-70)	ϕ70(50-110)	ϕ110(50-130)	ϕ114.3(95-180)	ϕ180(95-180)	ϕ215(180-255)
	D5	ϕ50	ϕ70	ϕ100	ϕ130	ϕ165	ϕ215	ϕ250
	D6	4-ϕ3.4	4-ϕ5.5	4-ϕ6.6	4-ϕ9	4-ϕ11	4-ϕ13	4-ϕ17
	D7	ϕ46(22-70)	ϕ70(45-90)	ϕ90(70-145)	ϕ145(70-145)	ϕ200(90-215)	ϕ200(90-300)	ϕ235(200-300)
	D8	(4-M3X8L)	(4-M5X10L)	(4-M6X12L)	(4-M8X25L)	(4-M12X30L)	(4-M12X30L)	(4-M12X30L)
	D9	M4X0.7P	M5X0.8P	M8X1.25P	M12X1.75P	M16X2.0P	M20X2.5P	M20X2.5P
B	L1	19	28.5	36.5	51	79	82	105
	L2	5.5	7	10	12	15	20	30
	L3	4	6	8	10	12	15	20
	L4	26	37	48	65	97	105	138
	L5	96	117	175	227	255	289	346
	L6	(122)	(154)	(223)	(292)	(352)	(394)	(484)
	L7	(3.5)	(5)	(5)	(11)	(14)	(15)	(7)
	L8	(30)	(34)	(44)	(60)	(81)	(85)	(85)
	L9	(69.5)	(81.5)	(107.5)	(134)	(165)	(213.5)	(268.5)
	L10	(95.5)	(110.5)	(158)	(199)	(230)	(303.5)	(378.5)
	C1	□42	□60	□90	□115	□142	□180	□220
	C2	(□42)	(□60)	(□90)	(□130)	(□142)	(□180)	(□220)
C	S1	2	2	2	5	5	5	7
	S2	16	25	32	40	65	70	90
	S3	15	18	24.5	35	43	59	79
	B	5	5	6	10	12	16	20
	K1	3	4	6	8	10	14	16
	K2	ϕ8	ϕ11	ϕ22	ϕ28	ϕ38	ϕ50	ϕ60
	K3	9.2	12.7	25	31.3	42	53.8	64.4
	K4	ϕ13	ϕ16	ϕ32	ϕ38	ϕ48	ϕ60	ϕ72
	K5	15	15	20	27	35	43	60
	K6	18	18	24	32	40	50	65

SERVOBOX Planetary Reducers

MODEL：MBL

2-Stage
Ratio：15，20，25，30，35，40，50，70，80，
100，120，140，160，180，200

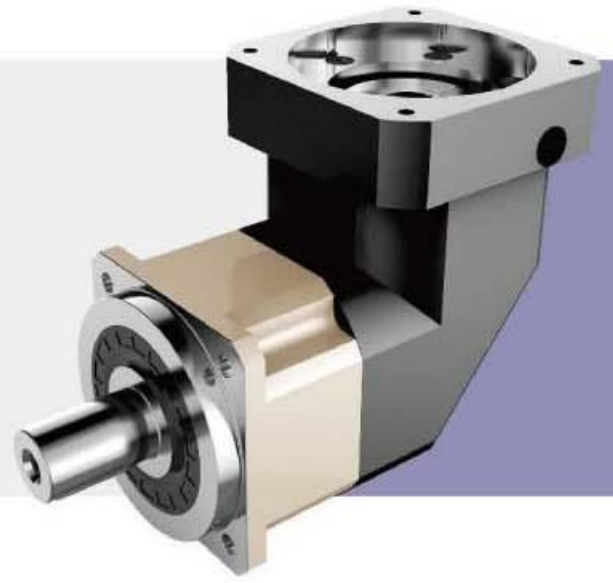

Dimensions：

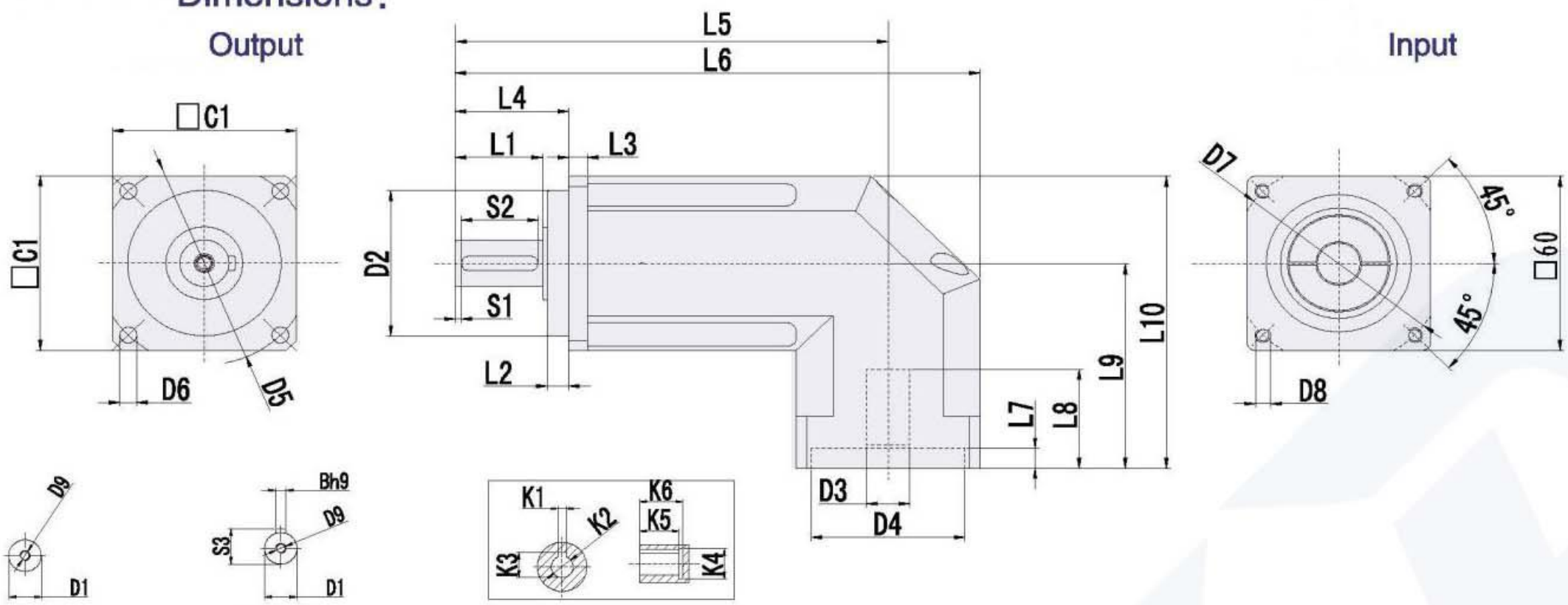

Output shaft type N　　Output shaft type S2　　Output hole type H

Unit:mm

	Code \ Model	MBL042-L2	MBL060-L2	MBL090-L2	MBL120-L2	MBL142-L2	MBL180-L2	MBL220-L2
A	D1	ϕ13	ϕ16	ϕ22	ϕ32	ϕ40	ϕ55	ϕ75
	D2	ϕ35	ϕ50	ϕ80	ϕ110	ϕ130	ϕ160	ϕ180
	D3	ϕ8(≤11)	ϕ14(≤14)	ϕ19(≤24)	ϕ24(≤32)	ϕ35(≤42)	ϕ38(≤50)	ϕ55(≤55)
	D4	ϕ30(30-50)	ϕ50(30-70)	ϕ70(50-110)	ϕ110(50-130)	ϕ114.3(95-180)	ϕ180(95-180)	ϕ215(180-255)
	D5	ϕ50	ϕ70	ϕ100	ϕ130	ϕ165	ϕ215	ϕ250
	D6	4-ϕ3.4	4-ϕ5.5	4-ϕ6.6	4-ϕ9	4-ϕ11	4-ϕ13	4-ϕ17
	D7	ϕ46(22-70)	ϕ70(45-90)	ϕ90(70-145)	ϕ145(70-145)	ϕ200(90-215)	ϕ200(90-300)	ϕ235(200-300)
	D8	(4-M3X8L)	(4-M5X10L)	(4-M6X12L)	(4-M8X25L)	(4-M12X30L)	(4-M12X30L)	(4-M12X30L)
	D9	M4X0.7P	M5X0.8P	M8X1.25P	M12X1.75P	M16X2.0P	M20X2.5P	M20X2.5P
B	L1	19	28.5	36.5	51	79	82	105
	L2	5.5	7	10	12	15	20	30
	L3	4	6	8	10	12	15	20
	L4	26	37	48	65	97	105	138
	L5	113	134	157	224	282	322	383
	L6	139	171	205	(292)	(378)	(427)	(521)
	L7	(3.5)	(5)	(5)	(11)	(14)	(15)	(7)
	L8	(30)	(34)	(44)	(60)	(81)	(85)	(85)
	L9	(69.5)	(81.5)	(107.5)	(134)	(165)	(213.5)	(268.5)
	L10	(90.5)	(111.5)	(152.5)	(191.5)	(236)	(303.5)	(378.5)
	C1	□42	□60	□90	□115	□142	□180	□220
	C2	(□42)	(□60)	(□90)	(□130)	(□142)	(□180)	(□220)
C	S1	2	2	2	5	5	5	7
	S2	16	25	32	40	65	70	90
	S3	15	18	24.5	35	43	59	79
	B	5	5	6	10	12	16	20
	K1	3	4	6	8	10	14	16
	K2	ϕ8	ϕ11	ϕ22	ϕ28	ϕ38	ϕ50	ϕ60
	K3	9.2	12.7	25	31.3	42	53.8	64.4
	K4	ϕ13	ϕ16	ϕ32	ϕ38	ϕ48	ϕ60	ϕ72
	K5	15	15	20	27	35	43	60
	K6	18	18	24	32	40	50	65

MD Series

中空旋轉平臺

Hollow Rotary Actuator

◆應用說明:

- 直接連接–旋轉盤面可與承載物直接鎖固。
- 中空結構–配綫・配管便利。
- 高定位精度–重復定位精度±5sec定位精度≦1min。
- 可懸吊安裝–本產品使用7字系列軸承,可作倒裝應用。
- 馬達輕鬆配–可結合各廠牌伺服馬達或步進馬達。

◆加工: 旋轉盤本體使用鋁合金材料，經"μ"級加工機，車銑完成，確保各部之精準度。
齒輪采用螺旋設計，達2級齒內之精度，再經氮化處理，司達HRC52度之硬度。
旋轉盤面于組裝完成後，再完成一道研磨工序，確保各部之平行與垂直度。

◆結構: 本旋轉盤考量到使用時側向力之問題,因采用"斜角滚珠軸承"(Taper Roller)以承受盤面側向力臂負載。

◆檢測: 全系列均再經由德制"海德漢"角度分析儀檢驗，齒輪背隙及反覆公差,達到產品全檢制程.

• 可替代DD馬達和凸輪分割器

機械動作不外乎是 直綫、 圓周運動，直綫運動以各類型滑臺爲主，而圓周運動則以分割器最具代表性，再則因技術的成熟與設備精度要求，使得D.D Motor日漸普及。然而，傳統分割器已無法滿足任意分割之需求；而D.D Motor雖能多元應用，且精度高，但其價格成本，也往往成爲使用者欲采用的一大門檻。"中空旋轉盤"在兩者之間取得平衡，填補了功能上的需求。不但能大幅降低D.D Motor的成本，更能滿足分割器所無法提供的高精度及數位化控制。

• 定位精準度高–反復定位精度爲±15sec 空轉爲(Lost Motion)2min

High positioning accuracy. Repeatable positioning accuracy is ±15 sec and idling accuracy is 2 min

减速机构部分采用超精密处理的齿轮，通过自身的调整机构消除齿隙，因此机构部分不会有齿隙。因单一方向的反复定位精度为 ±15sec；而从两方向定位时的空转为 2min，所以可以进行精准度高的定位。

Ultra-precision machined gears are used in the speed reduction mechanism to eliminate the backlash through its own adjustment mechanism, thus there will be no backlash in the part of mechanism. As repeated positioning accuracy is ±15 sec in one direction and idling precision is 2 min in two directions, positioning with high accuracy is possible.

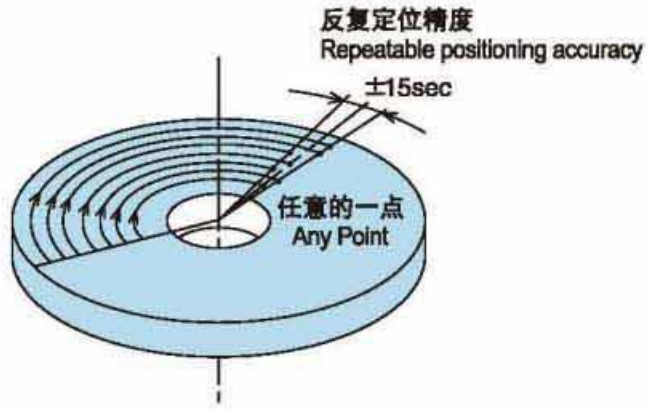

◆Application Notes:

- Direct Connection
  The rotating disc surface can be directly locked with the carrier.
- Hollow Structure
  Convenient wiring and piping.
- High Positioning Accuracy
  (Repeated positioning accuracy) ± 5sec (Positioning accuracy) ≦ 1min.
- Suspended Installation
  This product uses 7–character series bearings, which can be used for flip–chip applications.
- Easy matching of motors
  Can be combined with various brands of servo motors or stepper motors.

◆Processing:

The body of the rotating disc is made of aluminum alloy, which is completed by turning and milling with "μ" level processing machine to ensure the accuracy of each part.
The gear adopts helical design, which can reach the accuracy within 2 grades of teeth, and then it is nitrided to reach the hardness of HRC52 standard.
After the assembly of the rotating disk surface is completed,another grinding process is completed to ensure the parallelism and perpendicularity of each part.

◆Structure: This rotating disk considers the problem of lateral force during use, because the "Taper Roller" is used to bear the lateral load of the disk.

◆Test: The entire series is inspected by the German "Heidenhain" angle analyzer. The gear backlash and repeated tolerances achieve the full product inspection process.

- Alternative D.D motor and cam splitter

Straight lines motions and circular motions are two kinds of mechanical movements. Linear motion are mainly based on various types of slides, while circular motions are the most representative motion of cam indexers. And due to the maturity of technology and the accuracy requirement of equipment, D.D motor is becoming more and more popular. However, the traditional splitter has been unable to meet the needs of any segmentation. Though D. D Motor can be applied in multiple ways and with high precision, its high price is the main factors that make user reconsider. MD series hollow rotating table has successfully got a balance between the cam indexers and D.D motor. It fills the functional requirements that not only can greatly reduce the cost of D.D Motor, but also can meet the high-precision and digital control that the cam divider can't provide.

• 直接連結–簡易設計提升信賴

Direct connection–simple design enhances trust

中空的输出平台上，可直接安装设备的工作台及机器手臂。一般设备在通过皮带轮等机构零件进行定位运行时，多受机构零件传动效率的影响发生精度减低，或有维修机构零件的必要。
而MD系列因不需通过中间零件，便可直接安装，所以除了能直接运用产品本身的精度以外，也可以免去维修的麻烦。

The worktable and robot arm of the equipment can be installed directly on the hollow output platform. When the general equipment positions and operates by means of pulleys and other mechanical parts. It is mostly affected by the transmission efficiency of the mechanical parts and therefore the accuracy is reduced, or there is a need to maintain the parts of the mechanism. While the MD series hollow rotary actuators can be installed directly without intermediate parts. Therefore, in addition to the direct use of the accuracy of the actuator itself, maintenance can be avoided.

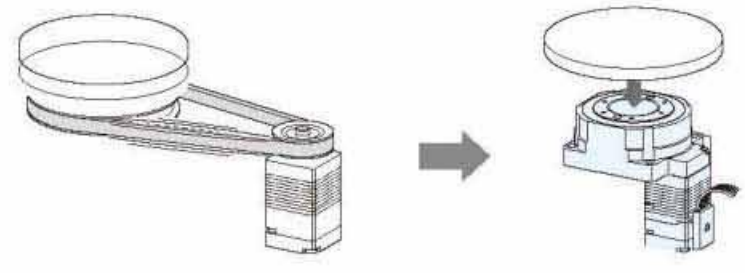

選用計算 Calculation of Selection

爲了選擇適合設備規格的產品,必須進行事先的計算工作。以下介紹選用zK系列時的計算方式。
Pre-calculation should be done in order to select suitable products of equipment. The introduction of calculation methods of the ZK series are as follow.

必要轉矩的計算方式
The calculation of the necessary torque

1、先计算工作物的惯性惯量。
工作惯性惯量请以传动装置惯性惯量的30倍以下为准。
2、决定定位角度。
3、没有摩擦轉矩時,請參考zK系列的定位時間圖來確認定位時間。
4、决定定位时间与加减速时间。
但必须遵守以下两个条件
·定位时间≥根据定位时间图求出最短的定位时间
·加减速时间t1×2≤定位时间
5、决定启动转速N1、然后按下面公式算出转速N2。请将N1设为低速[0~数r/min],
注意不要设的太大。

1、Firstly, calculate the inertia of the working object.
The work inertia should be under the 30 times of the inertia of the transmission equipment.
2、Determine the positioning angle
3、If there is no friction torque, please refer to the positioning time chart of ZK series to confirm the positioning time.
4、Determine the positioning time and acceleration and deceleration time.
Observe the following two conditions:
Positioning time ≥Calculating the shortest positioning time according to the positioning time chart.
Time of acceleration and deceleration t x 2 ≤ Positioning time
5、Determine the start speed N1, then calculate the speed N2 according to the following formula. Please set N1 to low speed 0~ number r/min]. Be careful not to set it too large.

$$N_2\,[\mathrm{r/min}] = \frac{\theta - 6N_1t_1}{6(t-t_1)}$$

N_2：轉速 Speed (r/min) [r/min]
θ ：定位角度Positioning angle[°]
N_1：啓動轉速Start speed[r/min]
t ：定位時間Positioning time [s]
t_1 ：加速(減速)時間Acceleration (deceleration) time [s]

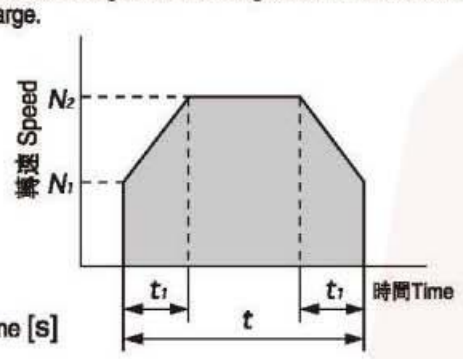

按上述公式計算得出的結果若不能滿足N1≤N2≤200 [r/min]的條件,則請返回4,再次確認條件。
If the result calculated by the above formula can not satisfy the condition of N1 < N2 <≤200 (r/min), please return to procedure 4 and confirm the conditions again.

6 按下列公式計算加速轉矩
Calculate the acceleration torque according to the following formula

$$\text{加速转矩}Ta\,[\mathrm{N\cdot m}] = (J_1 + J_L) \times \frac{\pi}{30} \times \frac{(N_2 - N_1)}{t}$$
Acceleration torque

J_1 ：旋轉式傳動裝置的慣性慣量Inertia of a rotating drive [kg·m²]
J_L ：全慣性慣量Inertia [kg·m²]
N_2 ：轉速speed [r/min]
N_1 ：啓動轉速Starting speed [r/min]
t_1 ：加速（減速）時間Acceleration (deceleration) time [s]

7 算出必要的轉矩，必要轉矩爲由摩擦阻抗引起的負載轉矩與由慣性慣量引起的加速轉矩相加，再乘以安全系數後得出的數值
Calculate the necessary torque, the necessary torque is the load torque caused by the friction impedance plus the acceleration torque caused by the inertia, and then multiplied by the safety factor.

必要转矩T＝（负载转矩[N·m]＋加速转矩[N·m]）×安全系数＝（TL＋Ta）×S
Necessary torque　Load torque　Acceleration torque　Safety factor

安全系數S請設定在1.5以上。
Please set safety factor S above 1.5.

8 確認必要轉矩T是否包含在轉速一轉矩特性的範圍以內。若不在範圍內，請轉回4,變更條件并重新計算
Verify that the necessary torque T is included in the range of speed and torque characteristics. If not, please turn back to step 4, then change the conditions and recalculate.

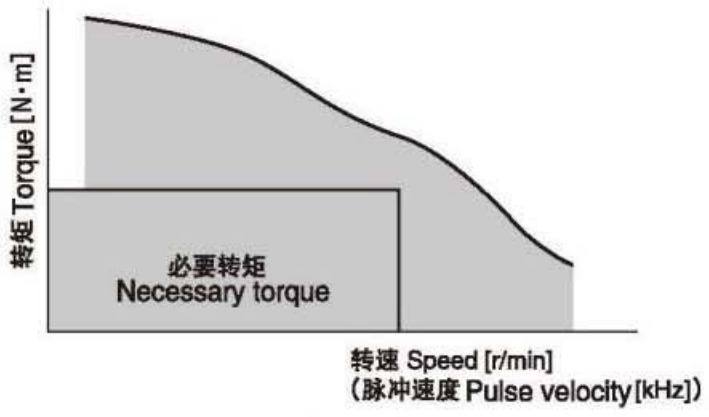

此外，將轉速換算成脉衝速度時，請按以下公式計算
In addition, when the speed is converted to the pulse speed, please calculate the following the below formula.

$$f\,[\mathrm{Hz}] = \frac{6N}{\theta s}$$

f ：脉衝速度Pulse velocity [Hz]
N ：轉速speed [r/min]
θs ：旋轉平臺的步距角度The step angle of the rotating platform[° /step]

轉向負載、慣性負載的計算方法
The calculation method of the steering load and the inertia load

如下圖所示當旋轉平臺上載有負載時,請按下面的公式算出軸向負載與慣性負載,并確認是否在規格值内。
As shown below, when the load is loaded on the rotary platform, please calculate the axial load and mass load according to the formula below, and confirm whether it is within the specification value.

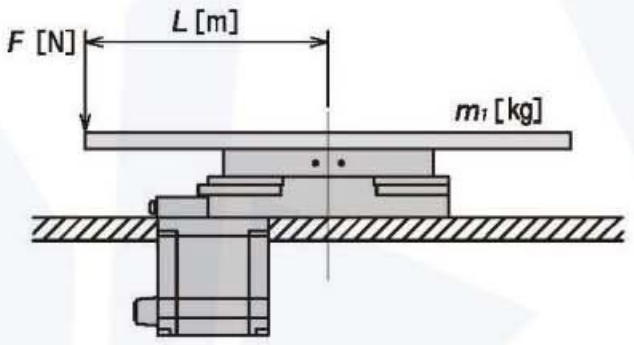

軸向負載Axial load [N]　$Fs = F + m_1 \times g$
慣性負載 Inertial load [N·m]　$M = F \times L$

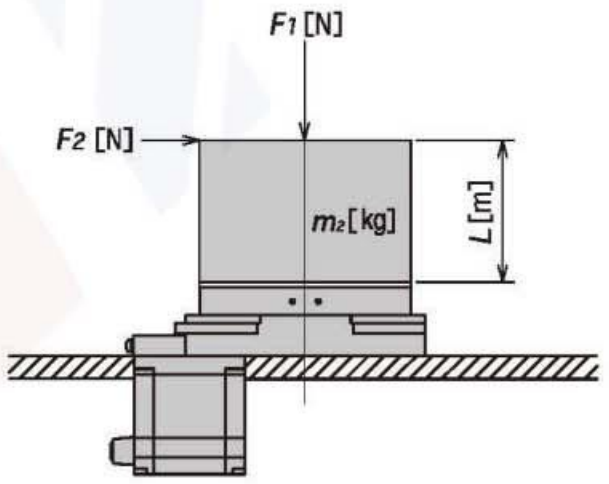

品名	a
MD-60	0.01
MD-100	0.02
MD-130	0.03
MD-200	0.04
MD-275	0.05

$Fs = F_1 + m_2 \times g$
$M = F_2 \times (L + a)$

因慣性負載引起的變爲量(參考值)
Variable quantity (reference value) caused by an inertial load

在旋轉平臺上附加慣性負載時，位置會發生變化。
圖表中的變位量顯示慣性負載按固定方向作用時，在距離旋轉平臺轉心的L位置上的變化。
慣性負載若從正負兩方向作用時，變位量約爲2倍。

When attaching the inertia load to the rotating platform, the position will change. The variable quantity in the chart shows the change of inertia load on the L position of the center of rotation from the rotating platform to a fixed direction. If the inertia load acts on the positive and negative two directions, the variable quantity will be about 2 times.

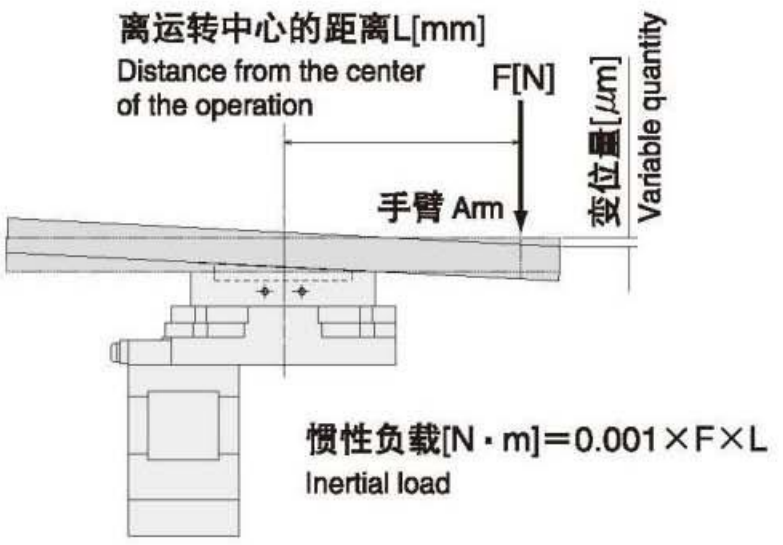

型號識別：Model Identification

MD	—	60	—	R	—	5	—	5A
旋轉平臺系列 Hollow Rotating Series		規格 Specifications		選配 Optional		減速比 Ratio		馬達類型 Motor

重量Weight: 2kg

R：直角轉向減速
Right angle steering deceleration
F：附馬達連結座
with motor connection seat

V1: 伺服Servo Ø8 PCD45,M3 V2: 伺服Servo Ø8 PCD46,M4	T1:步進 Stepper Ø5 PCD43.8，M3 T2:步進 Stepper Ø6 PCD43.8，M3 5A：含步進馬達42H5K-2A
各廠牌100W AC 伺服馬達 100W AC servo motor for each brand	各廠牌42型步進馬達 42 stepper motor for each brand

規格表 Specification

產品型號 Product model	旋轉平臺軸承 Bearing of rotate table	容許轉矩 Allowable torque(N.m)	精度壽命 Precision lifetime	允許轉速 Allowable speed(rpm)	減速比 Ratio	重復精度 Repeated accuracy (arc-sec)	定位精度 Positioning accuracy (arc-min)	旋轉平臺平行度 Parallelism of rotate plate(mm)	旋轉平臺同心度 Coaxiality of rotate plate(mm)	保護等級 Protection Class
MD60	深溝滾珠+止推滾珠軸承 Deep groove ball+Thrust ball bearing	5	15000Hrs	200 (盤面 Plate)	5	≤15	≤1	≤0.02	≤0.02	IP40
MD60R					15	≤20	≤1			

P.S:圓周單位 Circumferential unit：1 rpm=360°　1°　=60'(arc-min)　1'=60"(arc-sec)

圓周誤差換算直綫誤差：盤面直徑×3.14159÷(360°　×60'×60")背隙值

Circumferential error conversion linear error:Disc diameter×3.14159÷(360°　×60'×60")The value of backlash

定位精度檢測 Positioning Accuracy Examination

此規格定位精度謹以此比例檢驗 The accuracy of this specification is tested by this ratio

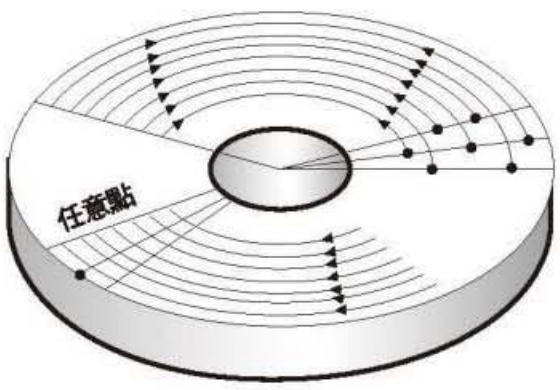

外徑任意點定位精度半徑 19mm≤1min
Positioning precision radius of any point of outer diameter 19mm≤1min

反復定位精度半徑19mm≤15sec
Precision radius of repeated positioning 19mm≤15sec

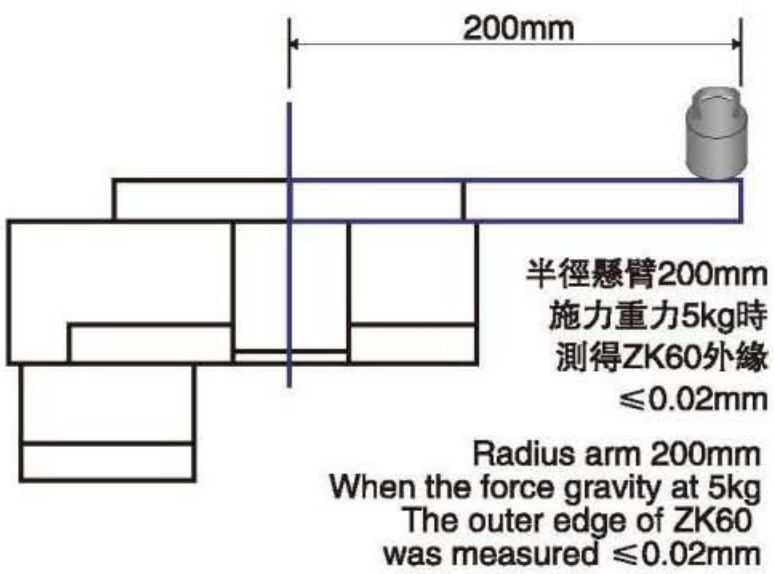

外形尺寸圖 Dimensions

Unit: mm

MD60–5–5A

(此型號含步進 This model contains stepper motor 42H5K–2A)

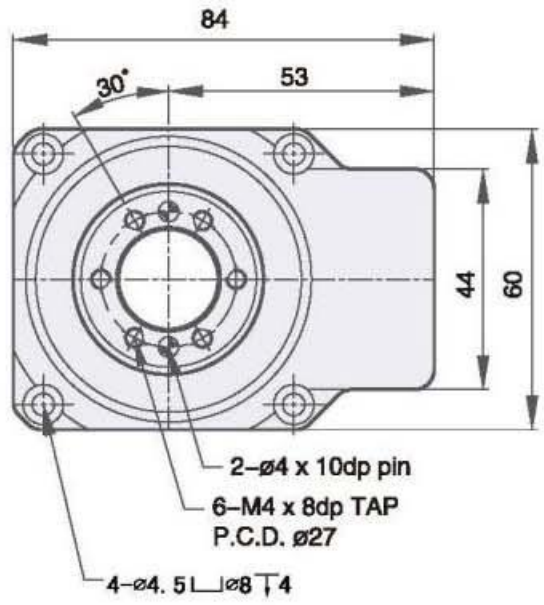

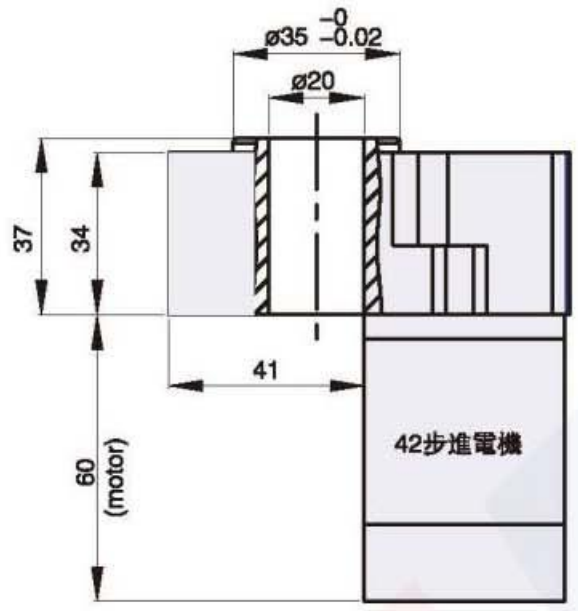

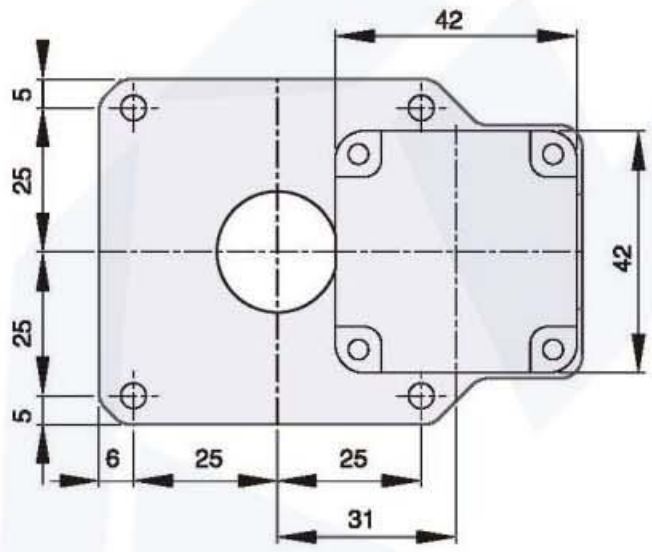

MD60F–5

(附連接座可自行組裝馬達 A self assembled motor with a connecting seat)

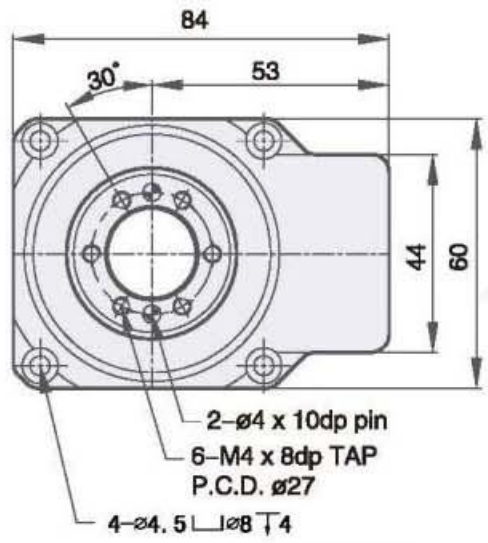

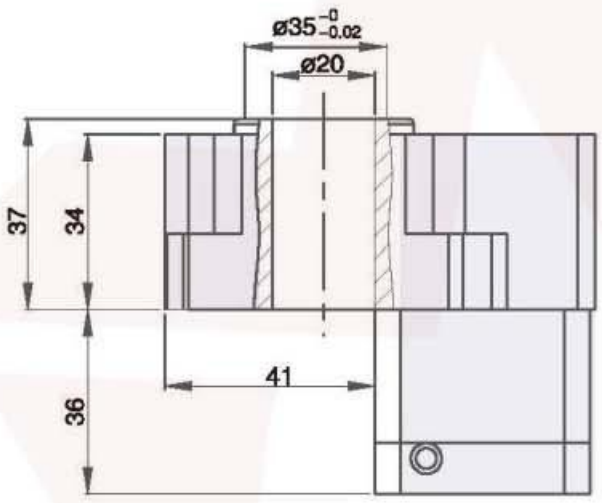

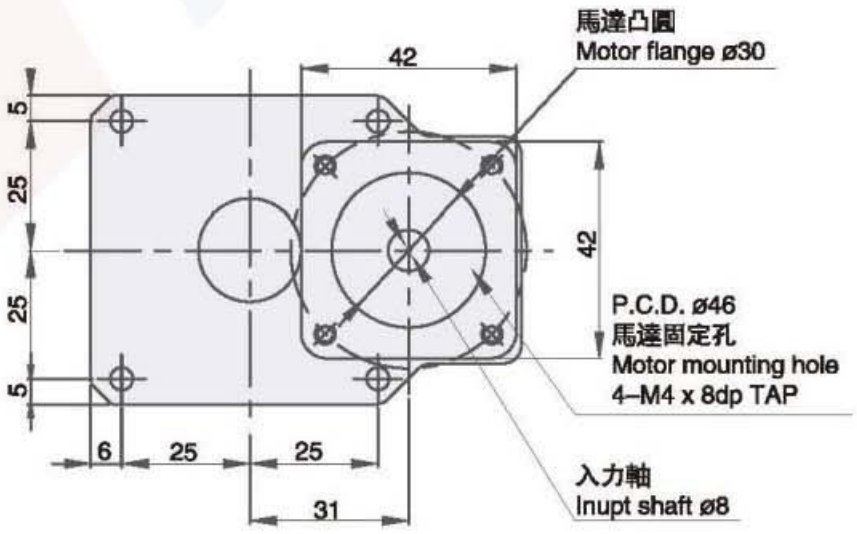

MD60R–15

(直角轉向式 Right angle steering 1:15)

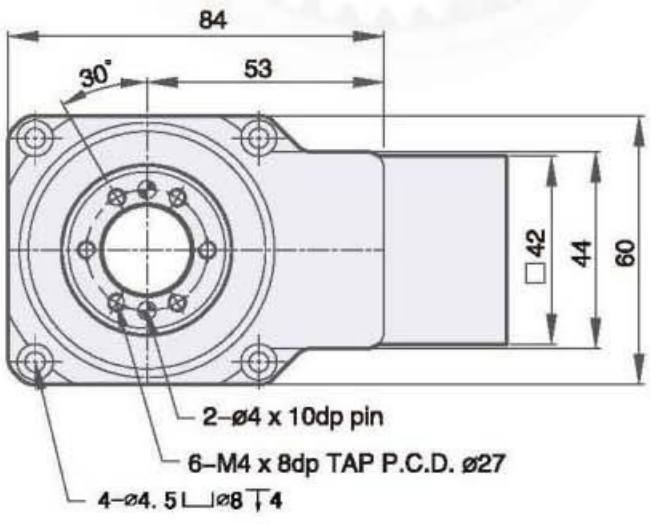

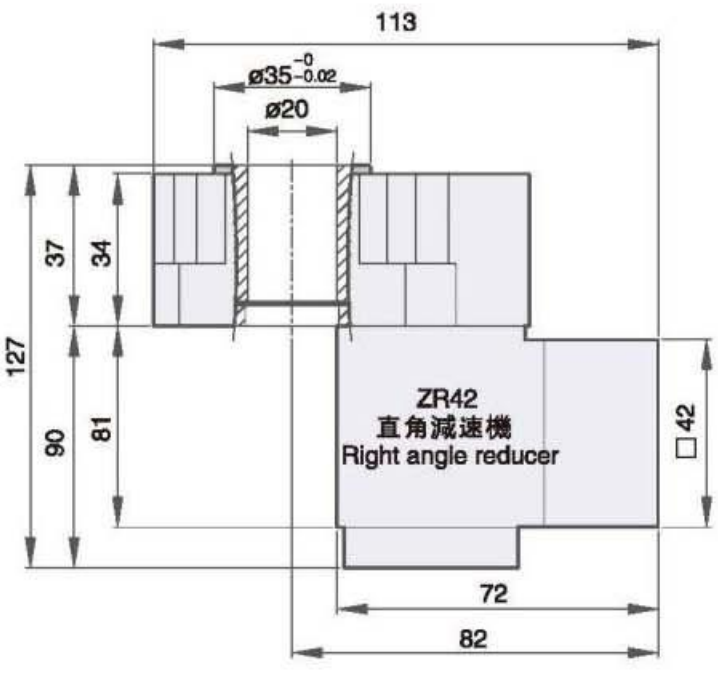

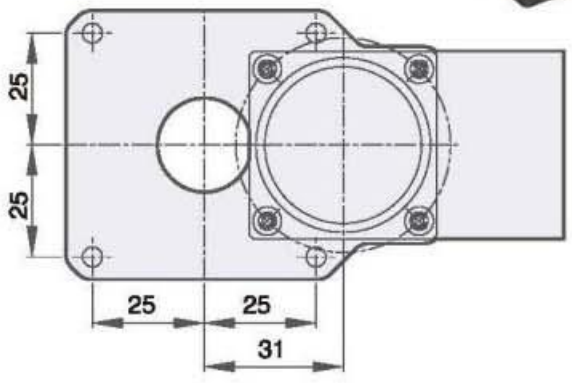

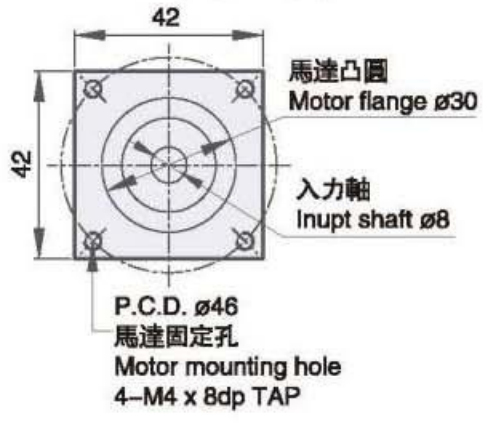

※訂購時請提供馬達法蘭尺寸

Please provide the size of the motor flange when ordering

P.S：原點 Sensor 規格(選配) OMRON EE–SX672

P.S：Origin Sensor specification (selection) OMRON EE–SX672

型號識別： Model Identification

MD	—	100	—	R	—	8	—	V2
旋轉平臺系列 Hollow Rotating Series		規格 Specifications		選配 Optional		減速比 Ratio		馬達類型 Motor

重量Weight: 2.5kg

R：直角轉向減速
Right angle steering deceleration
F：附馬達連結座
with motor connection seat

V1: 伺服Servo Ø14 PCD70 M4 V2: 伺服Servo Ø14 PCD70 M5	T1:步進 Stepper Ø8 PCD66.67,M4 T2:步進 Stepper Ø8 PCD70,M4 T3:步進 Stepper Ø10 PCD70,M4
各廠牌200~400W AC 伺服馬達 200~400W AC servo motor for each brand	各廠牌60型步進馬達 60 stepper motor for each brand

規格表 Specification

產品型號 Product model	旋轉平臺軸承 Bearing of rotate table	容許轉矩 Allowable torque(N.m)	精度壽命 Precision lifetime	允許轉速 Allowable speed(rpm)	減速比 Ratio	重復精度 Repeated accuracy (arc–sec)	定位精度 Positioning accuracy (arc–min)	旋轉平臺平行度 Parallelism of rotate plate(mm)	旋轉平臺同心度 Coaxiality of rotate plate(mm)	保護等級 Protection Class
MD100	圓錐滾子軸承 Tapered roller bearing	45	20000Hrs	200 (盤面 Plate)	8	≤10	≤1	≤0.02	≤0.015	IP40
MD100R					16,24	≤20	≤1			
MD100P					24,32,40	≤60	≤2			

P.S:圓周單位 Circumferential unit：1 rpm=360° 1° =60'(arc–min) 1'=60"(arc–sec)
圓周誤差換算直綫誤差：盤面直徑×3.14159÷(360° ×60'×60")背隙值
Circumferential error conversion linear error:Disc diameter×3.14159÷(360° ×60'×60")The value of backlash

定位精度檢測 Positioning Accuracy Examination

此規格定位精度謹以此比例檢驗 The accuracy of this specification is tested by this ratio

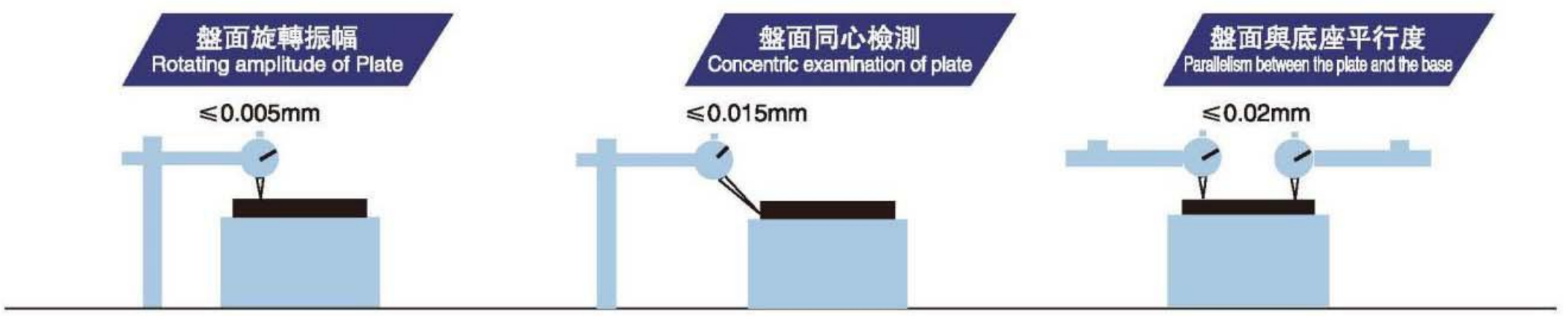

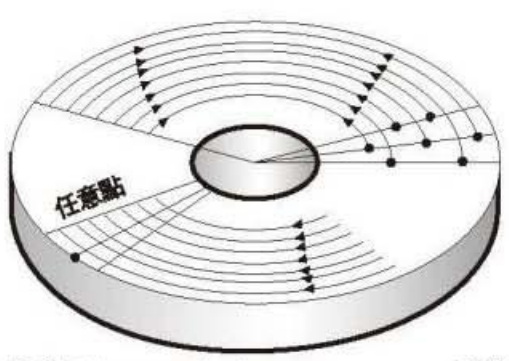

外徑任意點定位精度半徑 50mm≤1min
Positioning precision radius of any point of outer diameter 50mm≤1min

反復定位精度半徑 50mm≤10sec
Precision radius of repeated positioning 50mm≤10sec

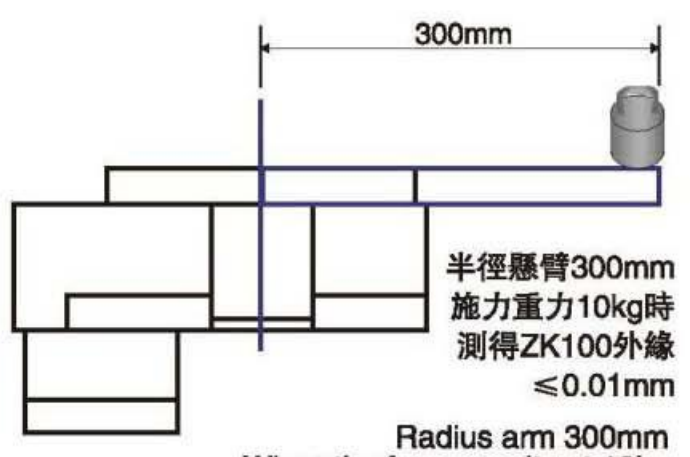

半徑懸臂300mm
施力重力10kg時
測得ZK100外緣
≤0.01mm

Radius arm 300mm
When the force gravity at 10kg
The outer edge of ZK100
was measured ≤0.01mm

外形尺寸圖 Dimensions

Unit: mm

MD 100

(附連接座可自行組裝馬達 A self assembled motor with a connecting seat)

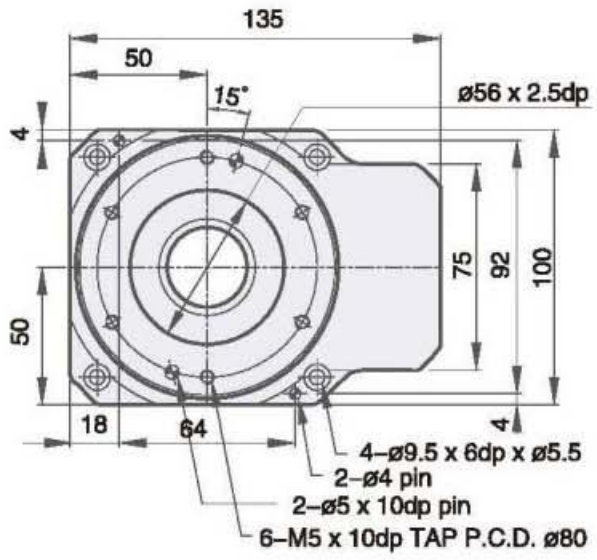

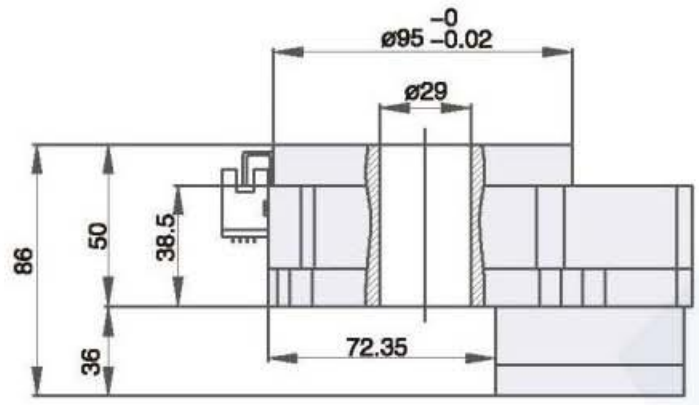

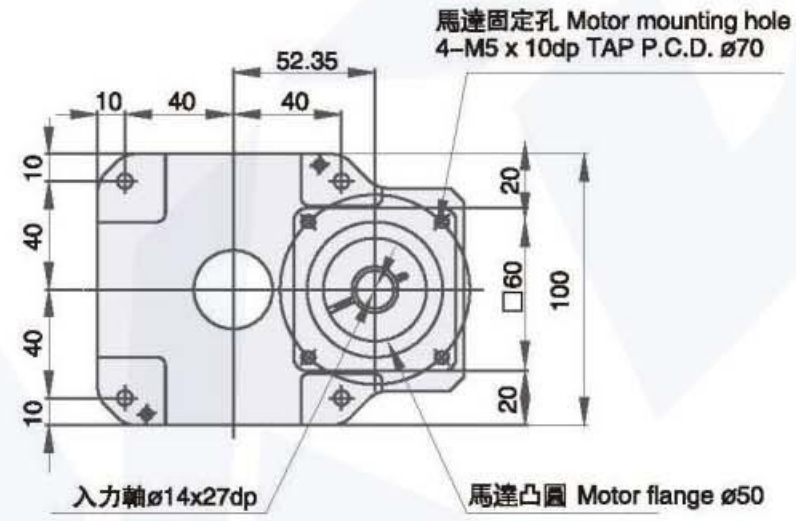

MD 100R

(直角轉向式 Right angle steering 1:16)

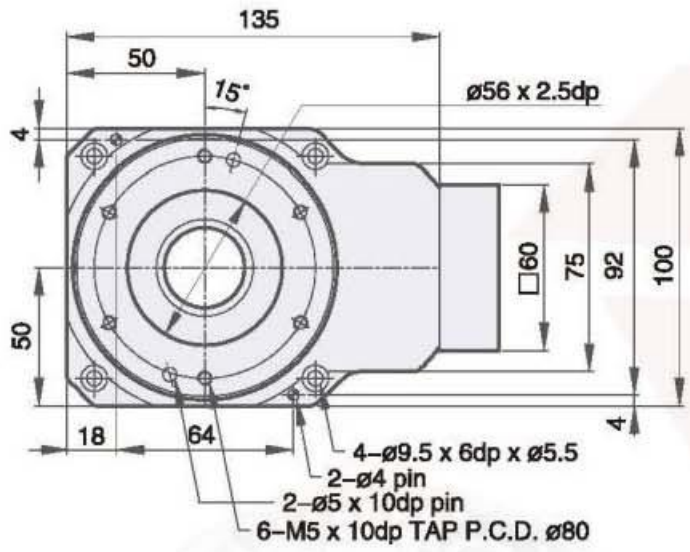

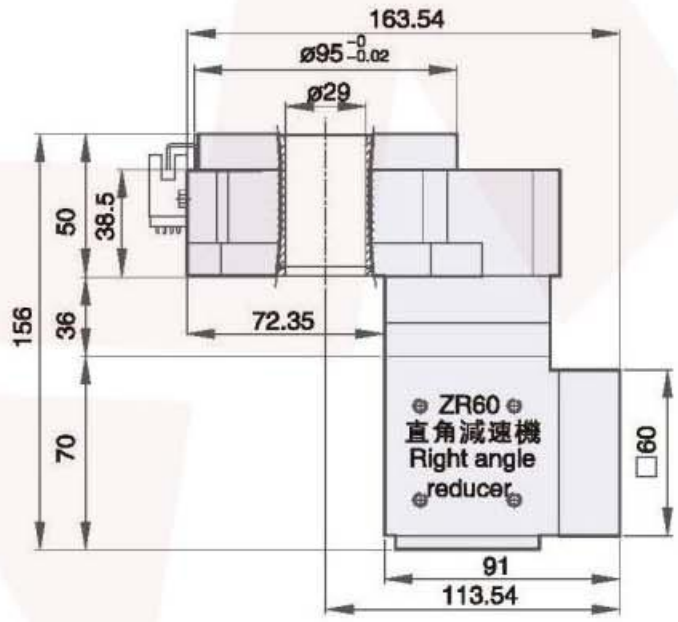

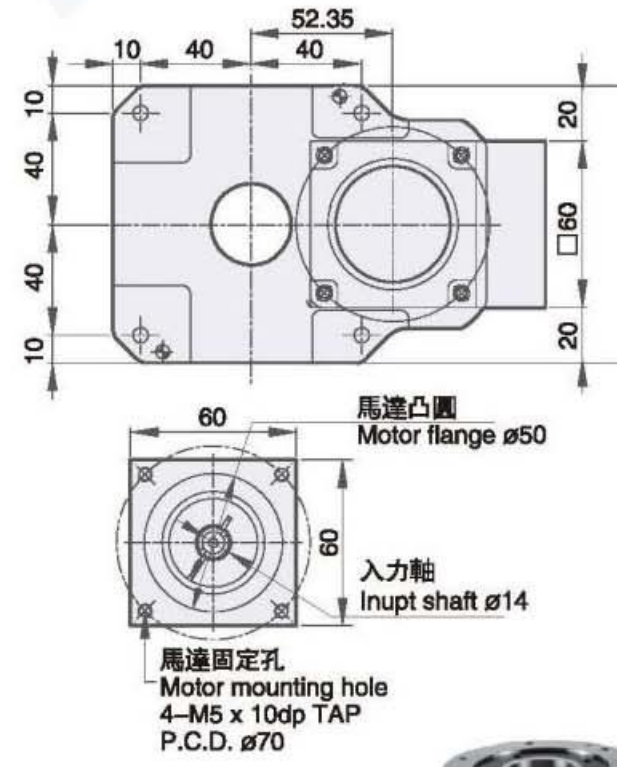

MD 100P

(附行星減速機速比 Attached planetary reducer ratio 24,32,40)

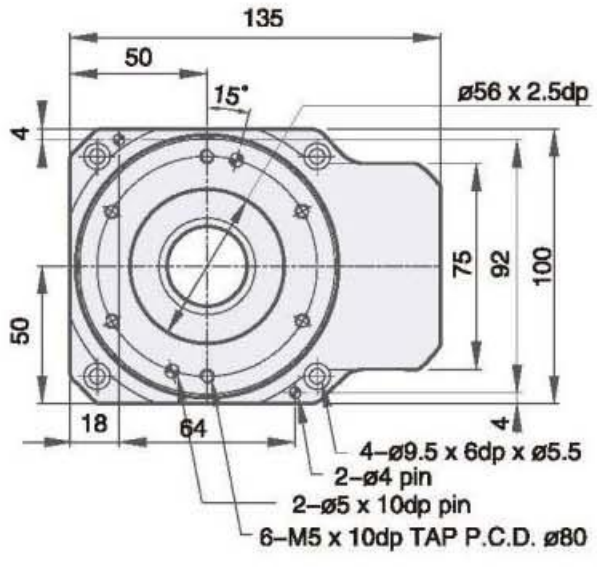

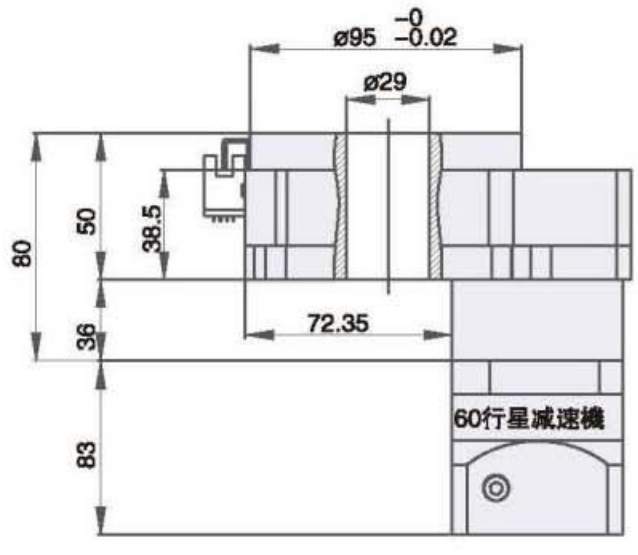

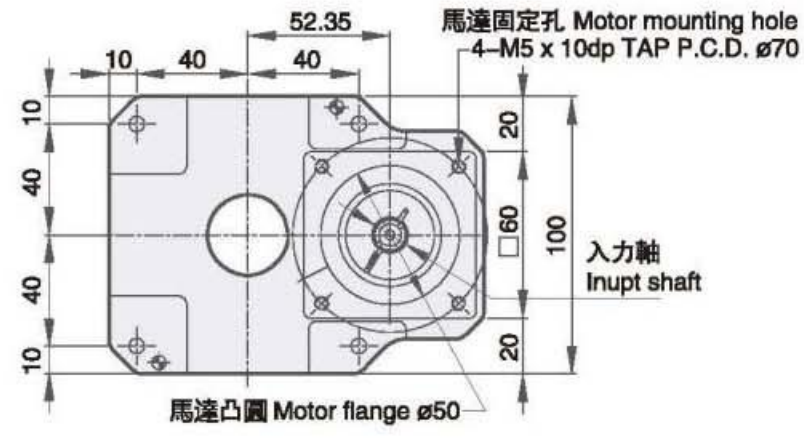

※訂購時請提供馬達法蘭尺寸

Please provide the size of the motor flange when ordering

P.S：原點 Sensor 規格(選配) OMRON EE-SX672

P.S：Origin Sensor specification (selection) OMRON EE-SX672

型號識別： Model Identification

MD	—	130	—	R	—	10	—	V2
旋轉平臺系列 Hollow Rotating Series		規格 Specifications		選配 Optional		減速比 Ratio		馬達類型 Motor

重量Weight: 4.5kg

R：直角轉向減速
Right angle steering deceleration
F：附馬達連結座
with motor connection seat

V1: 伺服Servo Ø14 PCD70 M4 V2: 伺服Servo Ø14 PCD70 M5	T1:步進 Stepper Ø8 PCD66.67,M4 T2:步進 Stepper Ø8 PCD70,M4 T3:步進 Stepper Ø10 PCD70,M4
各廠牌200~400W AC 伺服馬達 200~400W AC servo motor for each brand	各廠牌60型步進馬達 60 stepper motor for each brand

規格表 Specification

產品型號 Product model	旋轉平臺軸承 Bearing of rotate table	容許轉矩 Allowable torque(N.m)	精度壽命 Precision lifetime	允許轉速 Allowable speed(rpm)	減速比 Ratio	重復精度 Repeated accuracy (arc–sec)	定位精度 Positioning accuracy (arc–min)	旋轉平臺平行度 Parallelism of rotate plate(mm)	旋轉平臺同心度 Coaxiality of rotate plate(mm)	保護等級 Protection Class
MD130	圓錐滾子軸承 Tapered roller bearing	45	20000Hrs	200 (盤面 Plate)	10	≤10	≤1	≤0.02	≤0.015	IP40
MD130R					20,30	≤20	≤1			
MD130P					30,40,50	≤60	≤2			

P.S:圓周單位 Circumferential unit：1 rpm=360° 1° =60'(arc–min) 1'=60"(arc–sec)
圓周誤差換算直綫誤差：盤面直徑×3.14159÷(360° ×60'×60")背隙值
Circumferential error conversion linear error:Disc diameter×3.14159÷(360° ×60'×60")The value of backlash

定位精度檢測 Positioning Accuracy Examination

此規格定位精度謹以此比例檢驗 The accuracy of this specification is tested by this ratio

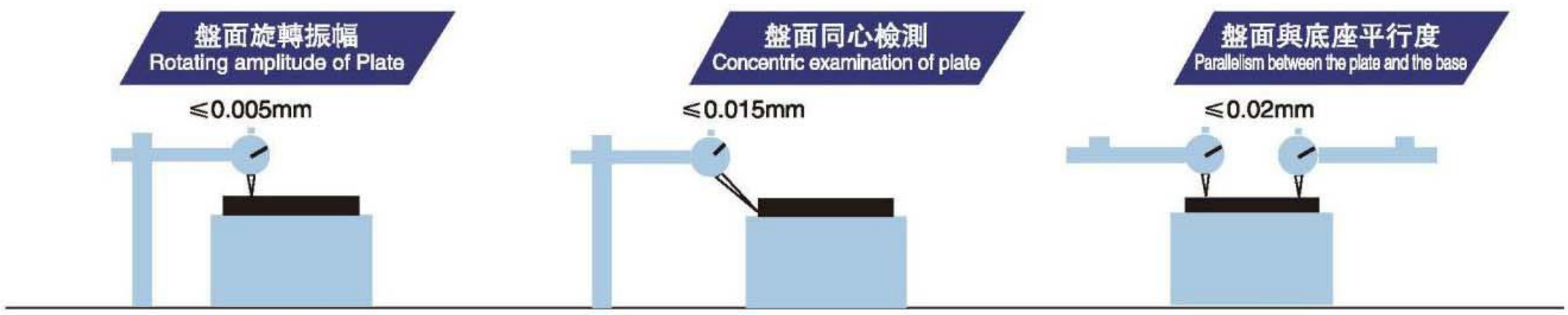

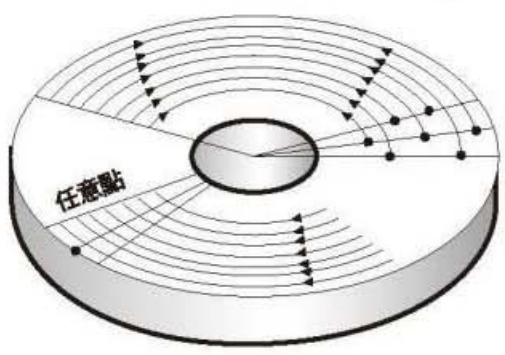

外徑任意點定位精度半徑 60mm≤1min
Positioning precision radius of any point of outer diameter 60mm≤1min

反復定位精度半徑 60mm≤10sec
Precision radius of repeated positioning 60mm≤10sec

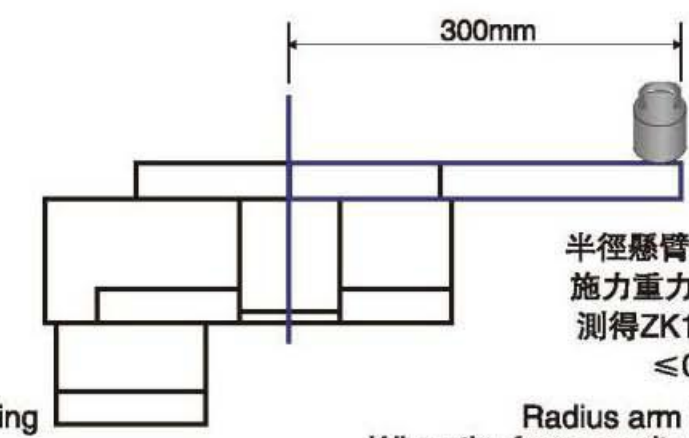

半徑懸臂300mm
施力重力15kg時
測得ZK130外緣
≤0.01mm

Radius arm 300mm
When the force gravity at 15kg
The outer edge of ZK130
was measured ≤0.01mm

外形尺寸圖 Dimensions

Unit: mm

MD 130

(附連接座可自行組裝馬達 A self assembled motor with a connecting seat)

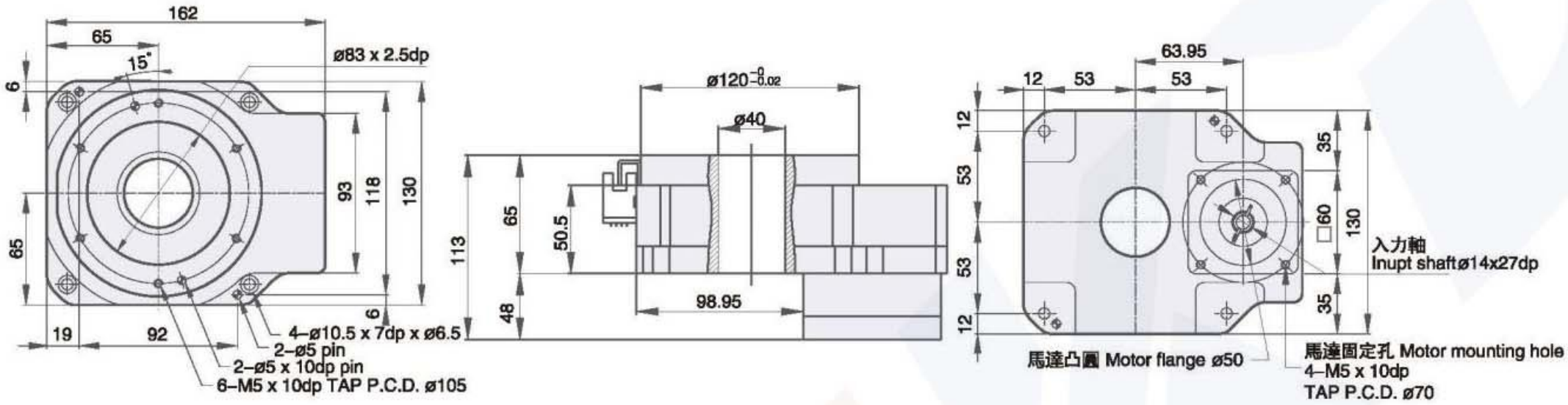

MD 130R

(直角轉向式 Right angle steering 1:20)

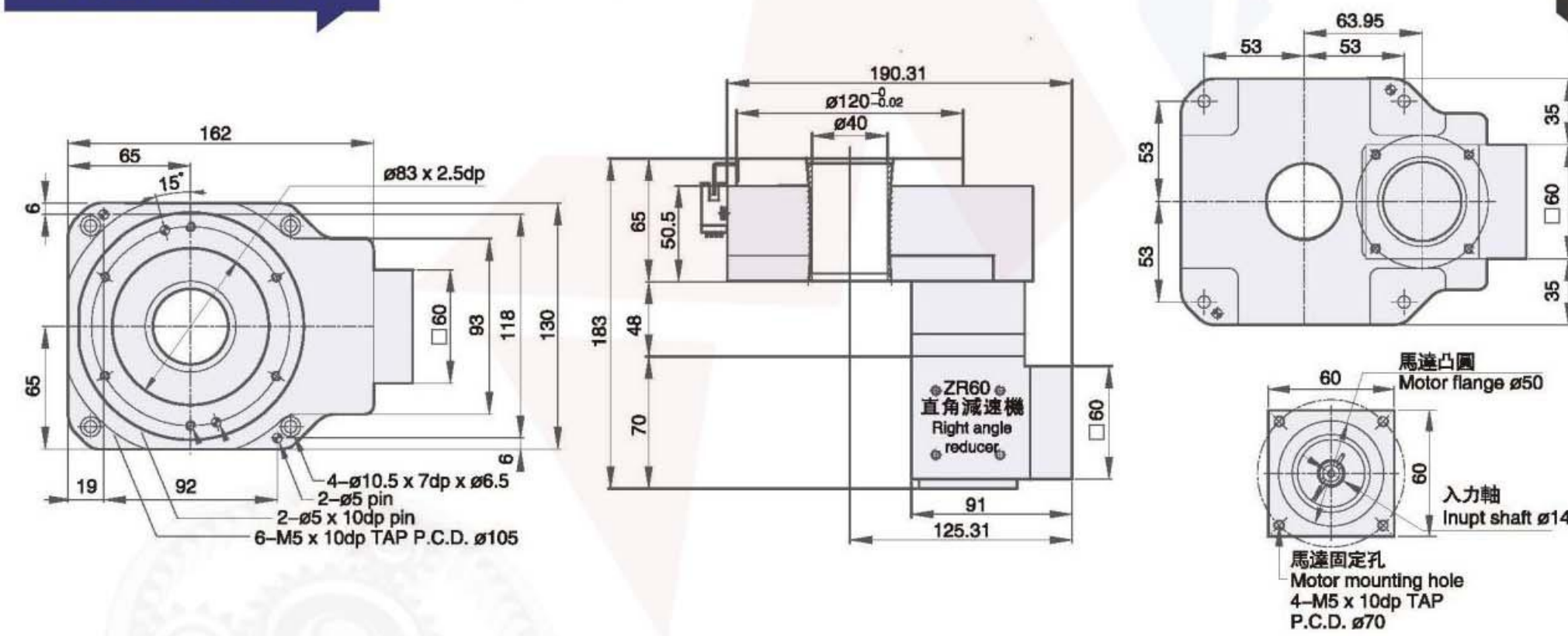

MD 130P

(附行星減速機速比 Attached planetary reducer ratio 30,40,50)

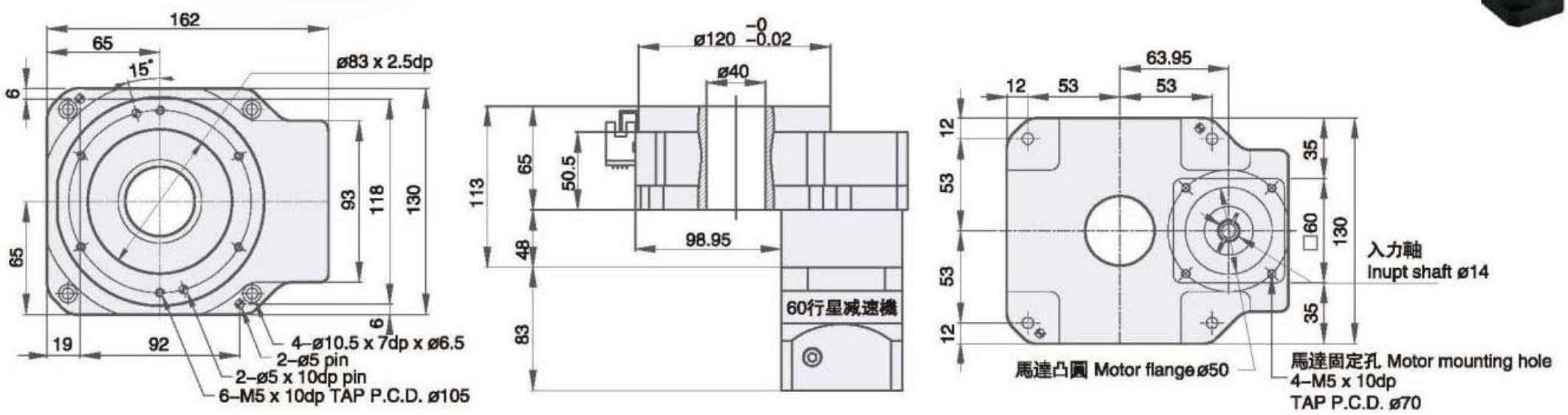

※訂購時請提供馬達法蘭尺寸

Please provide the size of the motor flange when ordering

P.S：原點 Sensor 規格(選配) OMRON EE–SX672

P.S：Origin Sensor specification (selection) OMRON EE–SX672

型號識別：Model Identification

MD	—	200	—	R	—	10	—	V2
旋轉平臺系列 Hollow Rotating Series		規格 Specifications		選配 Optional		減速比 Ratio		馬達類型 Motor

重量Weight: 11.5kg

R：直角轉向減速
Right angle steering deceleration
F：附馬達連結座
with motor connection seat

V1: 伺服Servo Ø19 PCD90 M5 V2: 伺服Servo Ø19 PCD90 M6	T1:步進 Stepper Ø14 PCD98.4，M5
各廠牌750W AC 伺服馬達 750W AC servo motor for each brand	各廠牌86型步進馬達 86 stepper motor for each brand

規格表 Specification

產品型號 Product model	旋轉平臺軸承 Bearing of rotate table	容許轉矩 Allowable torque(N.m)	精度壽命 Precision lifetime	允許轉速 Allowable speed(rpm)	減速比 Ratio	重復精度 Repeated accuracy (arc–sec)	定位精度 Positioning accuracy (arc–min)	旋轉平臺平行度 Parallelism of rotate plate(mm)	旋轉平臺同心度 Coaxiality of rotate plate(mm)	保護等級 Protection Class
MD200	圓錐滾子軸承 Tapered roller bearing	80	20000Hrs	200 (盤面 Plate)	10	≤10	≤1	≤0.02	≤0.015	IP40
MD200R					20,30	≤20	≤1			
MD200P					30,40,50	≤60	≤2			

P.S:圓周單位 Circumferential unit：1 rpm=360°　1°　=60'(arc–min)　1'=60"(arc–sec)
圓周誤差換算直綫誤差：盤面直徑×3.14159÷(360°　×60'×60")背隙值
Circumferential error conversion linear error:Disc diameter×3.14159÷(360°　×60'×60")The value of backlash

定位精度檢測 Positioning Accuracy Examination

此規格定位精度謹以此比例檢驗 The accuracy of this specification is tested by this ratio

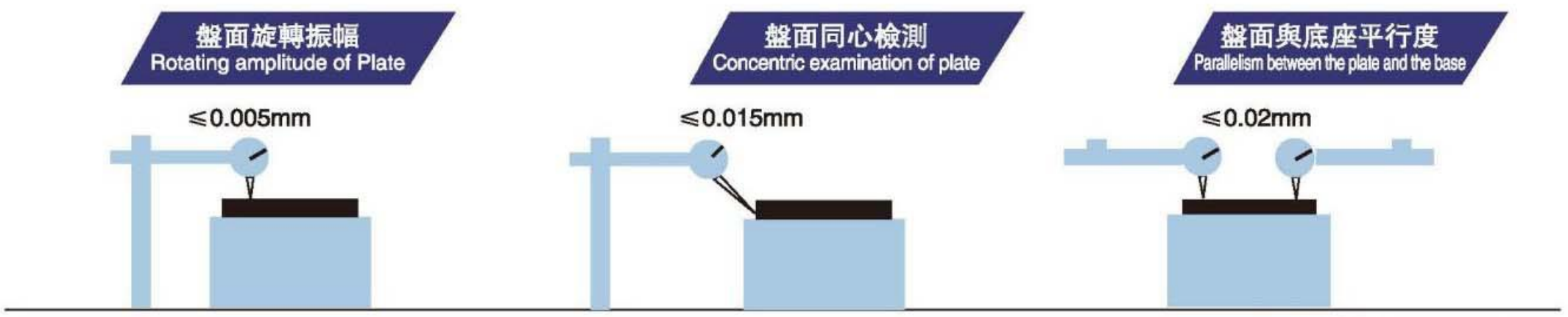

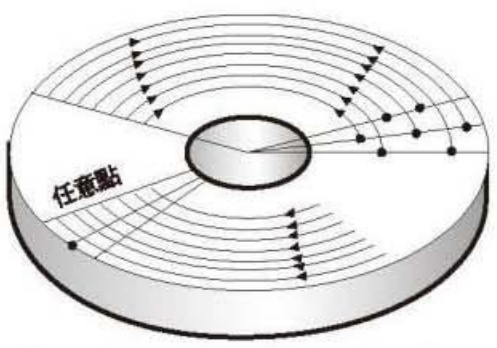

外徑任意點定位精度半徑 100mm≤1min
Positioning precision radius of any point of outer diameter 100mm≤1min

反復定位精度半徑 100mm≤10sec
Precision radius of repeated positioning 100mm≤10sec

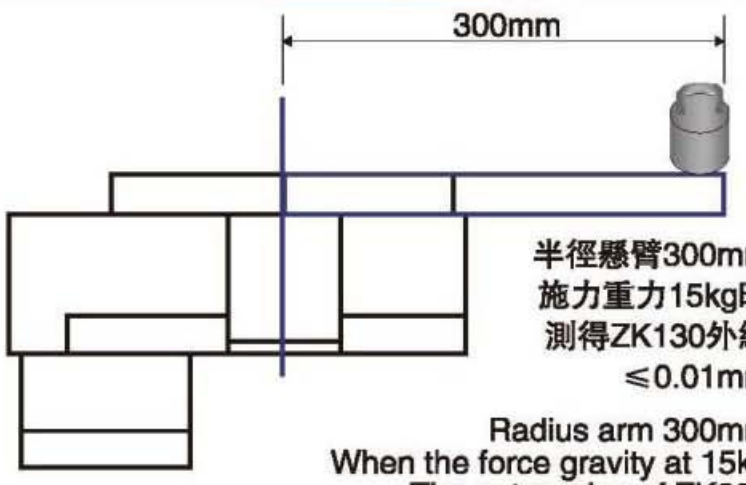

半徑懸臂300mm
施力重力15kg時
測得ZK130外緣
≤0.01mm

Radius arm 300mm
When the force gravity at 15kg
The outer edge of ZK200
was measured ≤0.01mm

外形尺寸圖 Dimensions

Unit: mm

MD 200

(附連接座可自行組裝馬達 A self assembled motor with a connecting seat)

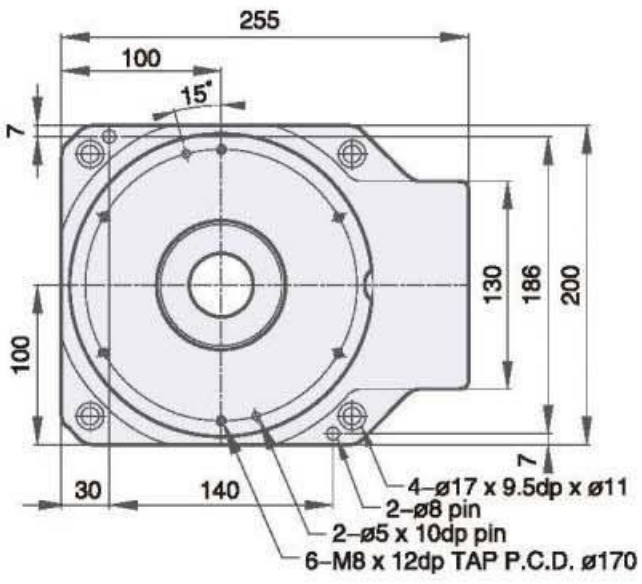

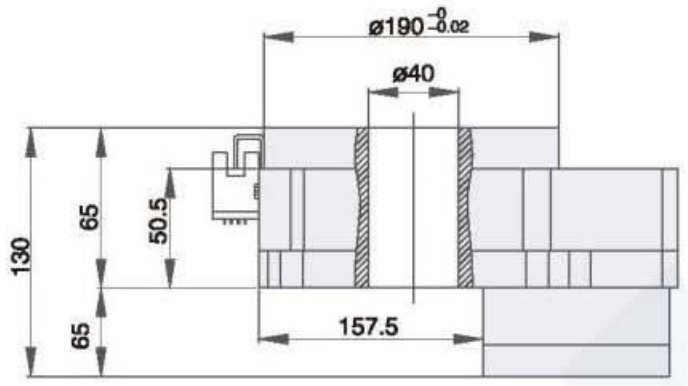

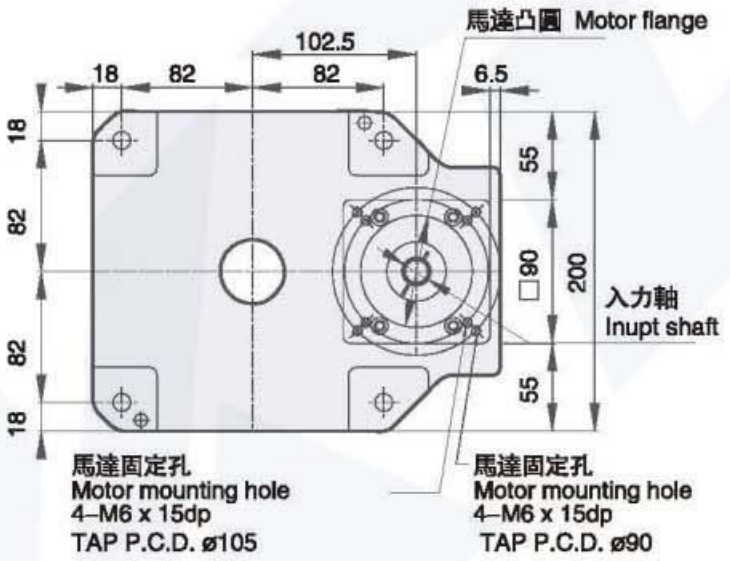

MD 200R

(直角轉向式 Right angle steering 1:20)

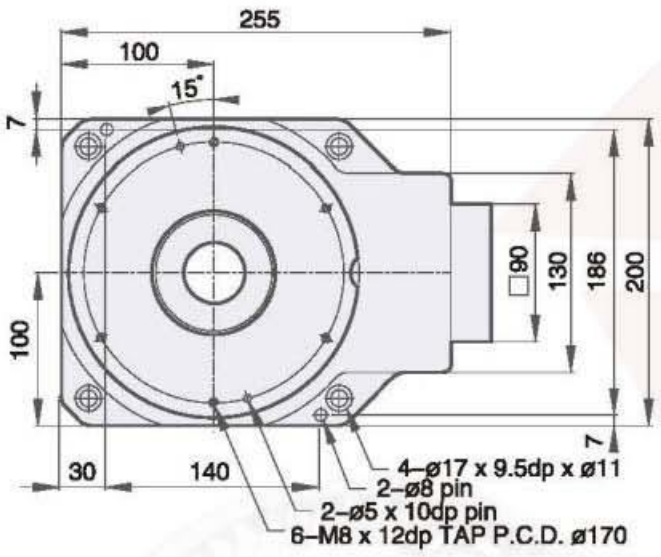

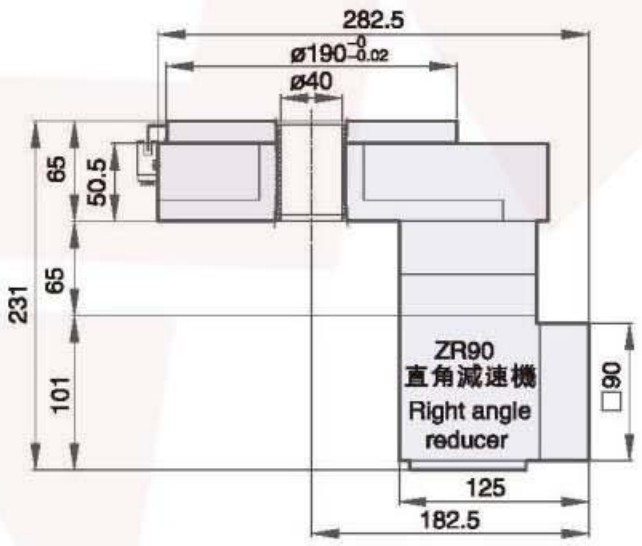

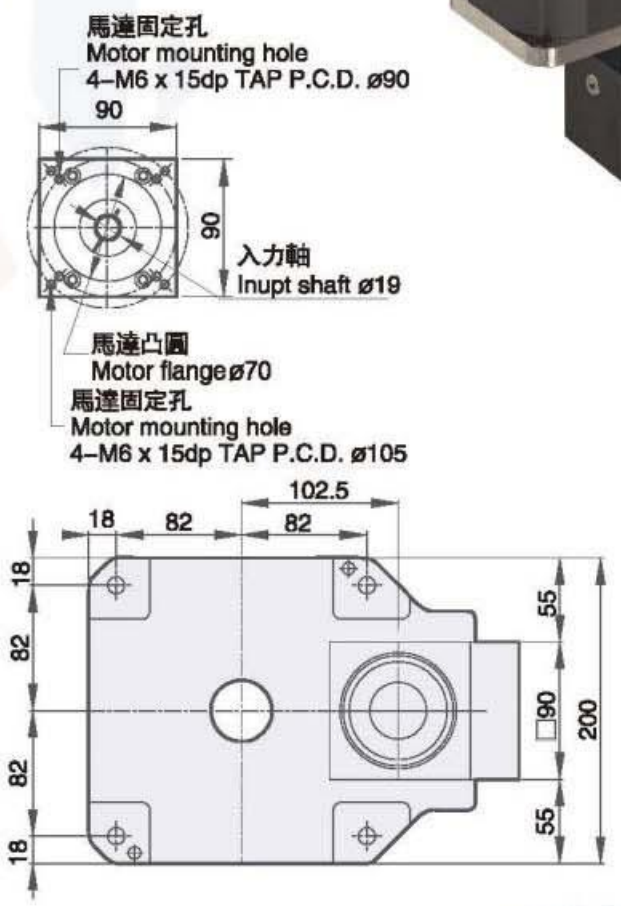

MD 200P

(附行星減速機速比 Attached planetary reducer ratio 30,40,50)

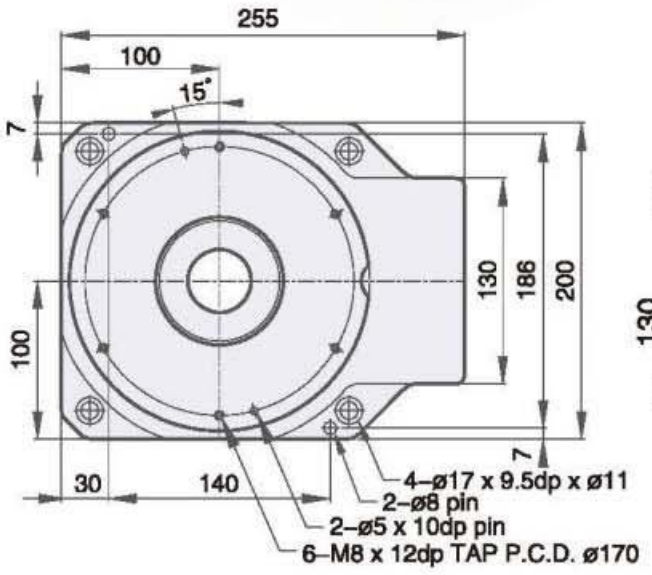

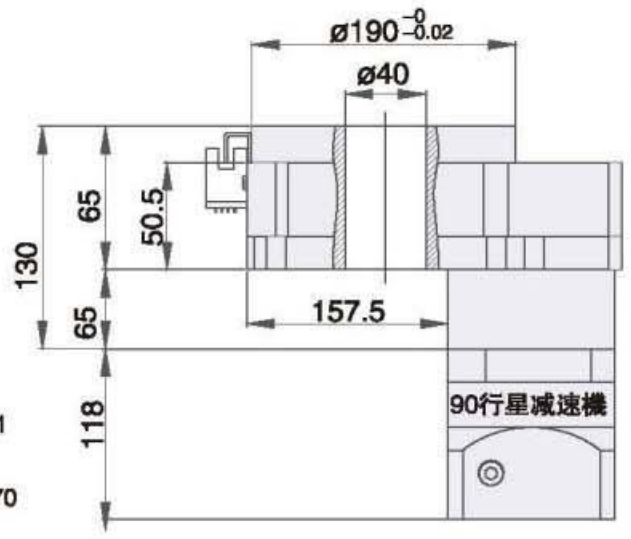

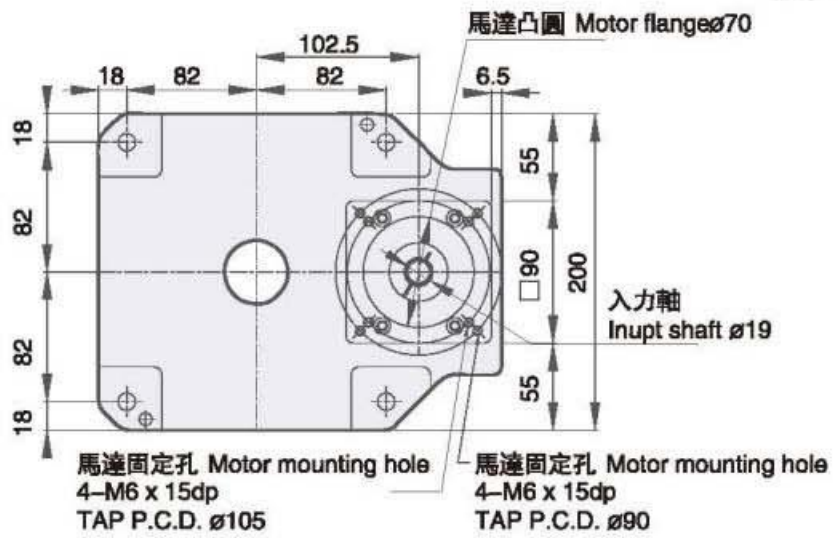

※訂購時請提供馬達法蘭尺寸

Please provide the size of the motor flange when ordering

P.S：原點 Sensor 規格(選配) OMRON EE–SX672

P.S：Origin Sensor specification (selection) OMRON EE–SX672

型號識別： Model Identification

MD	275	R	10	V2
旋轉平臺系列 Hollow Rotating Series	規格 Specifications	選配 Optional	減速比 Ratio	馬達類型 Motor

重量Weight: 16kg

R：直角轉向減速
Right angle steering deceleration
F：附馬達連結座
with motor connection seat

V1: 伺服Servo Ø19 PCD90 M5 V2: 伺服Servo Ø19 PCD90 M6	T1:步進 Stepper Ø14 PCD98.4，M5
各廠牌750W AC 伺服馬達 750W AC servo motor for each brand	各廠牌86型步進馬達 86 stepper motor for each brand

規格表 Specification

產品型號 Product model	旋轉平臺軸承 Bearing of rotate table	容許轉矩 Allowable torque(N.m)	精度壽命 Precision lifetime	允許轉速 Allowable speed(rpm)	減速比 Ratio	重復精度 Repeated accuracy (arc-sec)	定位精度 Positioning accuracy (arc-min)	旋轉平臺平行度 Parallelism of rotate plate(mm)	旋轉平臺同心度 Coaxiality of rotate plate(mm)	保護等級 Protection Class
MD275	圓錐滾子軸承 Tapered roller bearing	80	20000Hrs	200 (盤面 Plate)	10	≤10	≤1	≤0.02	≤0.015	IP40
MD275R					20,30	≤20	≤1			
MD275P					30,40,50	≤60	≤2			

P.S:圓周單位 Circumferential unit：1 rpm=360°　1°　=60'(arc-min)　1'=60"(arc-sec)
圓周誤差換算直綫誤差：盤面直徑×3.14159÷(360°　×60'×60")背隙值
Circumferential error conversion linear error:Disc diameter×3.14159÷(360°　×60'×60")The value of backlash

定位精度檢測 Positioning Accuracy Examination

此規格定位精度謹以此比例檢驗 The accuracy of this specification is tested by this ratio

盤面旋轉振幅
Rotating amplitude of Plate

≤0.005mm

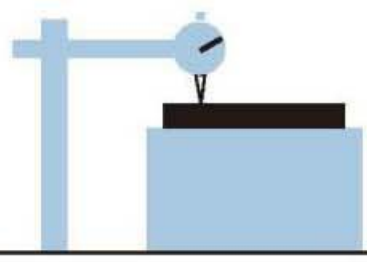

盤面同心檢測
Concentric examination of plate

≤0.015mm

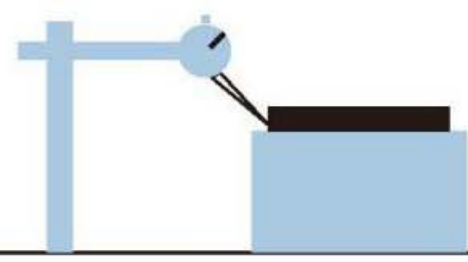

盤面與底座平行度
Parallelism between the plate and the base

≤0.02mm

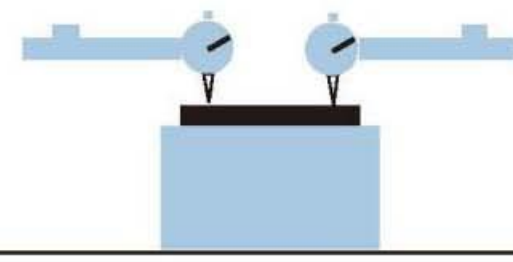

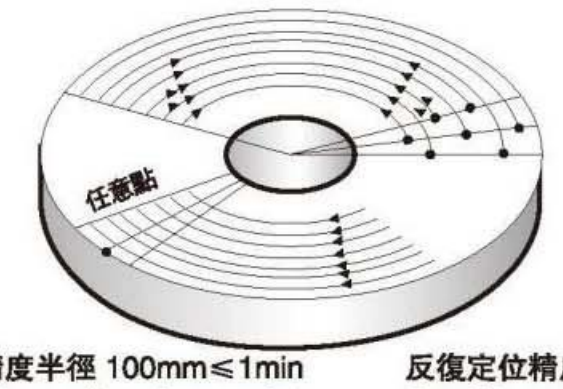

外徑任意點定位精度半徑 100mm≤1min
Positioning precision radius of any point of outer diameter 100mm≤1min

反復定位精度半徑 100mm≤10sec
Precision radius of repeated positioning 100mm≤10sec

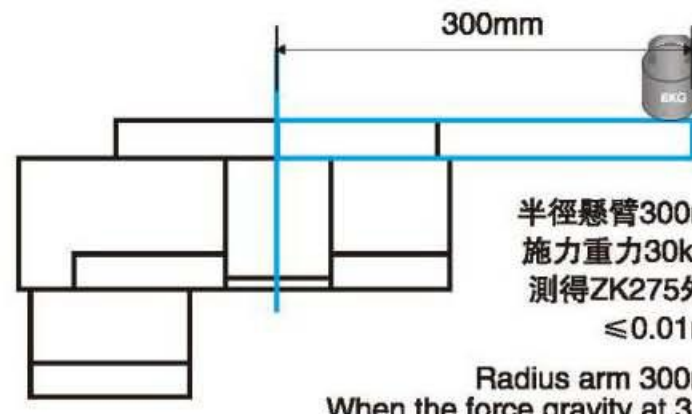

半徑懸臂300mm
施力重力30kg時
測得ZK275外緣
≤0.01mm

Radius arm 300mm
When the force gravity at 30kg
The outer edge of ZK275
was measured ≤0.01mm

外形尺寸圖 Dimensions

Unit: mm

MD 275

(附連接座可自行組裝馬達 A self assembled motor with a connecting seat)

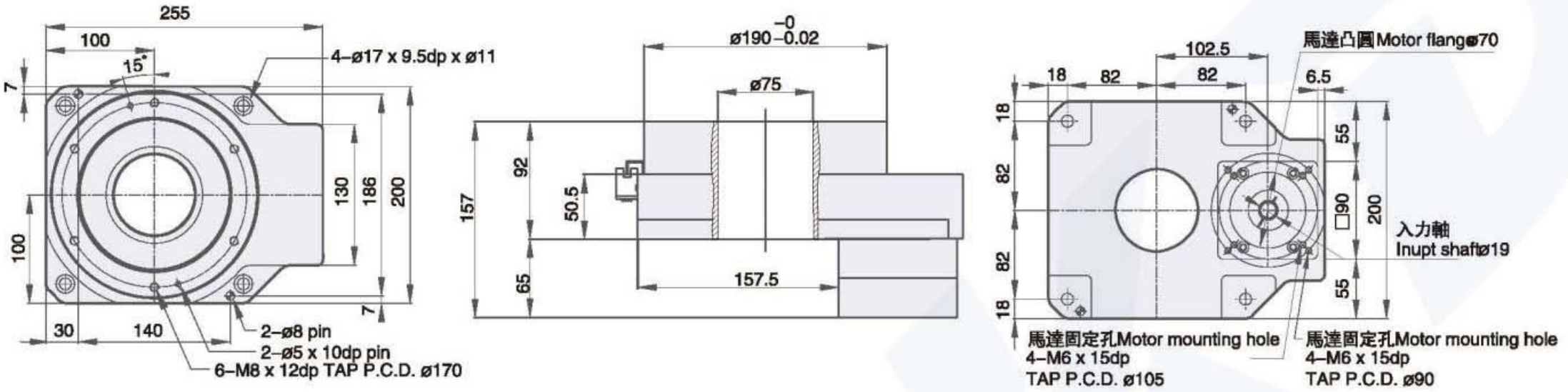

MD 275R

(直角轉向式 Right angle steering 1:20)

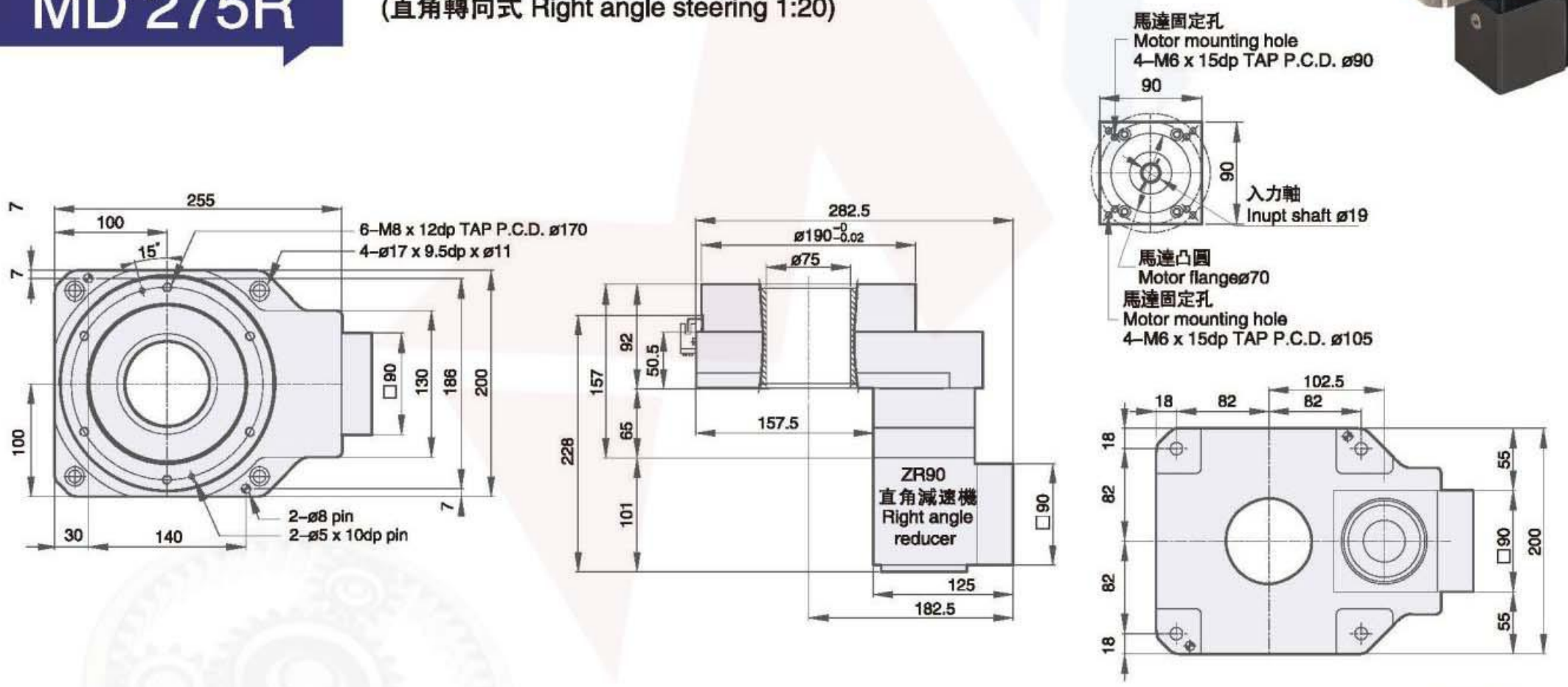

MD 275P

(附行星減速機速比 Attached planetary reducer ratio 30,40,50)

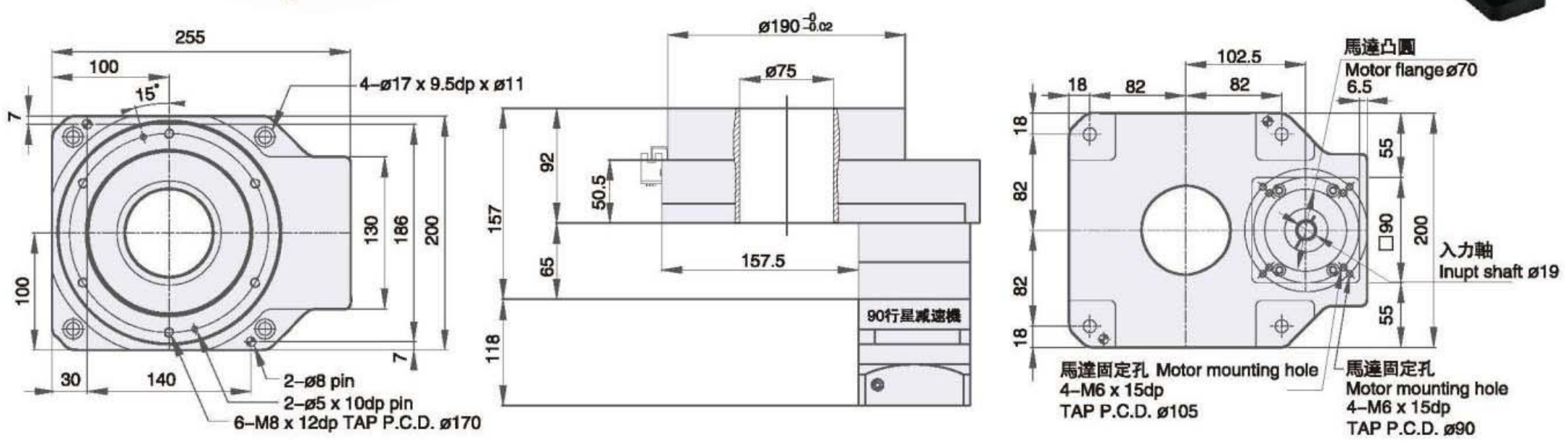

※訂購時請提供馬達法蘭尺寸

Please provide the size of the motor flange when ordering

P.S：原點 Sensor 規格(選配) OMRON EE–SX672

P.S：Origin Sensor specification (selection) OMRON EE–SX672

PD Series

High Precision Flange-output Gearbox

Indication of Model Numbers

PD090	–	10	–	S2	–	P1	MOTO
Reducer model		Ratio		Output Bearing		Backlash Class	Motor Type
PD047 PD064 PD090 PD110 PD140 PD200 PD255		1–Stage 4, 5, 7, 10 2–Stage 20, 25, 28, 35 40, 50, 70, 100		A: Standard(Ball Bearing) T: Taper Bearing		P0: High precision backlash P1: Precision backlash P2: Standard backlash	Motor Brand & Model No. As shown below

The following motor sizes need to be confirmed to match the corresponding reducer

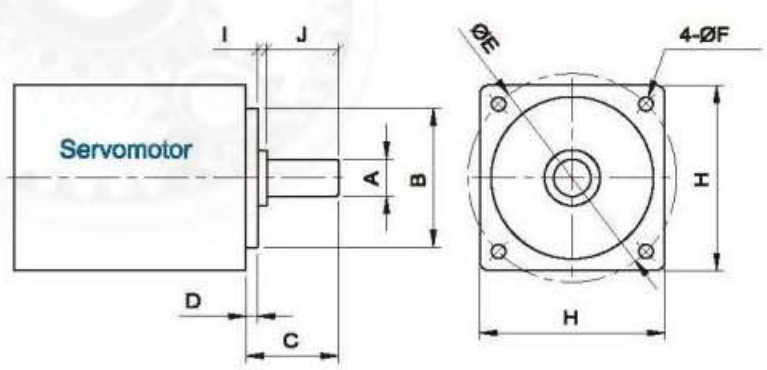

A	B	C	D	E	F	H	I	J

Planetary reducer order number

Type	Model	Ratio	Output Shaft Keyway	Backlash Class	MOTOR NO.

PD Reducer Specifications

Specs	Unit	Stage	Ratio	PD047	PD064	PD090	PD110	PD140	PD200	PD255
T_{2N} Rated Output Torque	Nm	1	4	19	50	133	278	555	1050	1700
			5	22	60	160	330	650	1200	2000
			7	19	50	140	300	550	1100	1800
			10	14	40	100	230	450	900	1500
		2	20	19	50	133	278	555	1050	1700
			25	22	60	160	330	650	1200	2000
			35	19	50	140	300	550	1100	1800
			40	19	45	120	260	500	1000	1600
			50	22	60	160	330	650	1200	2000
			70	19	50	140	300	550	1100	1800
			100	14	40	100	230	450	900	1500
T_{2NOT}[1]/ Max.Output Torque	Nm	1,2	4~100	3Times of Nominal Output Torque						
n_{1N}/Rated Input Speed	rpm	1,2	4~100	5000	5000	4000	4000	3000	3000	2000
n_{1B}/Max.Input Speed	rpm	1,2	4~100	10000	10000	8000	8000	6000	6000	4000
Micro Backlash P0	arcmin	1	4~10	≤1	≤1	≤1	≤1	≤1	≤1	≤1
		2	12~100	≤2	≤2	≤2	≤2	≤2	≤2	≤2
Precision Backlash P1	arcmin	1	4~10	≤3	≤3	≤3	≤3	≤3	≤3	≤3
		2	20~100	≤4	≤4	≤4	≤4	≤4	≤4	≤4
Standard Backlash P2	arcmin	1	4~10	≤5	≤5	≤5	≤5	≤5	≤5	≤5
		2	20~100	≤6	≤6	≤6	≤6	≤6	≤6	≤6
Torsional Rigidity	Nm/arcmin	1,2	4~100	8	13	30	80	150	450	1010
M_{2KB}[3] Max. Bending Moment	N	1,2	4~100	43	125	235	430	1300	3064	5900
F_{2a1B}[2] / Max.Axial Force	N	1,2	4~100	990	1050	2850	2990	10590	16660	29430
Service Life	hr	1,2	4~100	22000h						
η /Efficiency	%	1	4~10	≥97%						
		2	20~100	≥94%						
Weight	kg	1	4~10	0.7	1.3	3.2	5.8	12.3	33	57.9
		2	20~100	1	1.5	4.1	7.6	16.8	38	72.6
Operating Temperature	℃	1,2	4~100	(-15℃ ~ +90℃)						
Lubrication		1,2	4~100	Synthetic Grease						
Protection Class		1,2	4~100	IP65						
Mounting Position		1,2	4~100	Any Direction						
n1=3000rpm Noise Level	dB(A)	1,2	4~100	≤56	≤58	≤60	≤63	≤65	≤67	≤70

Reducer Rotary Inertia

Specs	Unit	Stage	Ratio	PD047	PD064	PD090	PD110	PD140	PD200	PD255
J1 Moment of Inertia	$kg.cm^2$		4	0.03	0.14	0.48	2.74	7.54	23.67	54.37
		1	5	0.03	0.13	0.47	2.71	7.42	23.29	53.27
			7	0.03	0.13	0.45	2.62	7.14	22.48	50.97
			10	0.03	0.13	0.44	2.57	7.03	22.51	50.56
		2	20–40	0.03	0.03	0.13	0.47	2.71	7.42	23.29
			50–100	0.03	0.03	0.13	0.44	2.57	7.03	22.51

1. Max. reduction ratio(i=Nin/Nout) 2.The Max. acceleration torque T2B=60% of T2NOT
3. When output speed is 100rpm, acting on the output shaft center position, *Continuous operation, service life is 15000hrs。

SERVOBOX Planetary Reducers

MODEL： PD

1-Stage

Ratio：4，5，7，10

Dimensions：

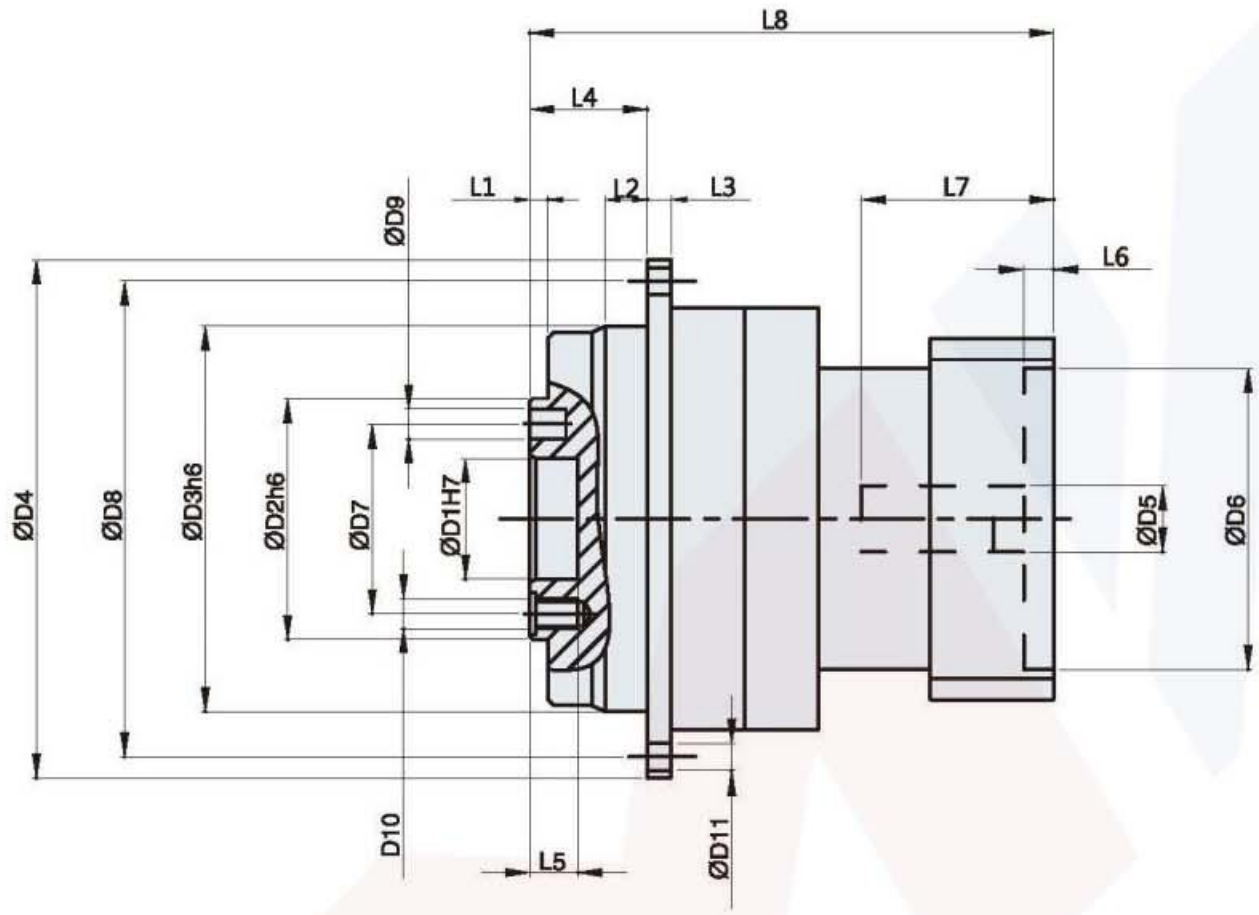

Input

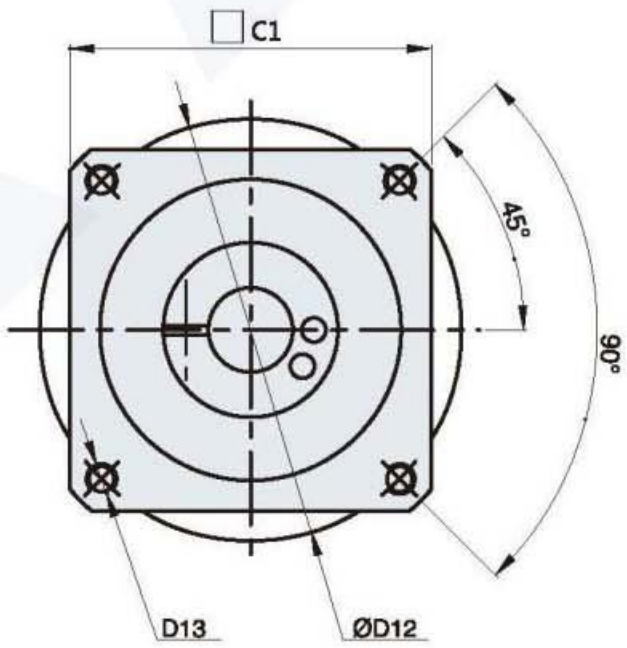

Unit:mm

	Code \ Model	PD047-L1	PD064-L1	PD090-L1	PD110-L1	PD140-L1	PD200-L1	PD255-L1
A	D1	12	20	31.5	40	50	80	100
	D2	28	40	63	80	100	160	180
	D3	47	64	90	110	140	200	255
	D4	72	86	118	145	179	247	300
	D5	≤11/≤12	11(8～14)	19(14～22)	24(22～28)	24(24～48)	35(35～48)	48(48～55)
	D6	30	30(30～50)	50(50～110)	110	110(110～114.3)	114.3(114.3～200)	200
	D7	20	31.5	50	63	80	125	140
	D8	67	79	109	135	168	233	280
	D9	Ø3	Ø5x (D)8	Ø6x (D)7	Ø6x (D)7	Ø8x (D)7	Ø10x (D)10	Ø12x (D)10
	D10	4-M3	7-M5x (D)8	8-M6x (D)12	11-M6x (D)12	11-M8x (D)17	11-M10x (D)20	12-M16x (D)25
	D11	8-Ø3.4	8-Ø4.5	8-Ø5.5	8-Ø5.5	12-Ø6.6	12-Ø9	16-Ø13.5
	D12	46	45(45～70)	70(70～145)	145	145(145～200)	200(200～235)	235
	D13	M4	M4～M5	M5～M8	M8	M8～M12	M12	M12
B	L1	3	3	6	6	6	8	12
	L2	7	7	10	10	14.5	15	21.5
	L3	4	4	7	8	10	12	18
	L4	19.5	19.5	30	29	38	50	66
	L5	4	8	12	13	12	16	20
	L6	3.5	4～5	5～10	10	6～8	6～10	10
	L7	30	28(28～34)	32(32～59)	60	73(73～115)	88(88～117)	119.5
	L8	70	80.5～87	97(97～120)	142	159(159～201)	196(196～229)	255
C	C1	48	60(40～60)	90(60～130)	130	130(130～180)	180(180～220)	220

SERVOBOX Planetary Reducers

MODEL： PD

2-Stage

Ratio：20，25，28，35，40，50，70，100

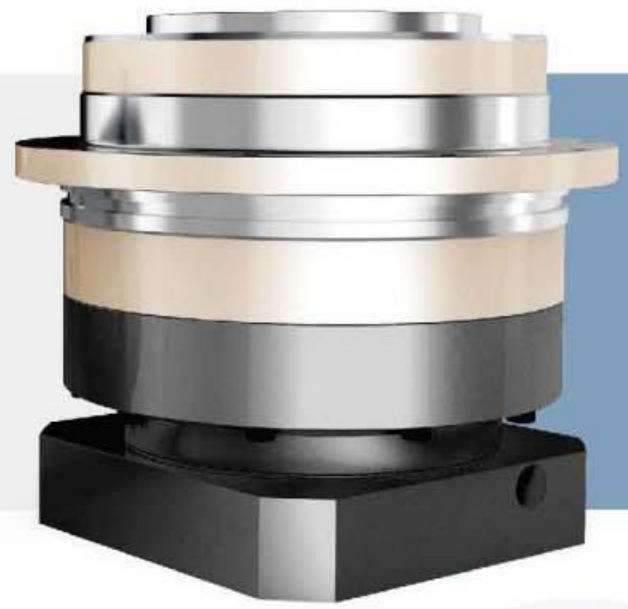

Dimensions：

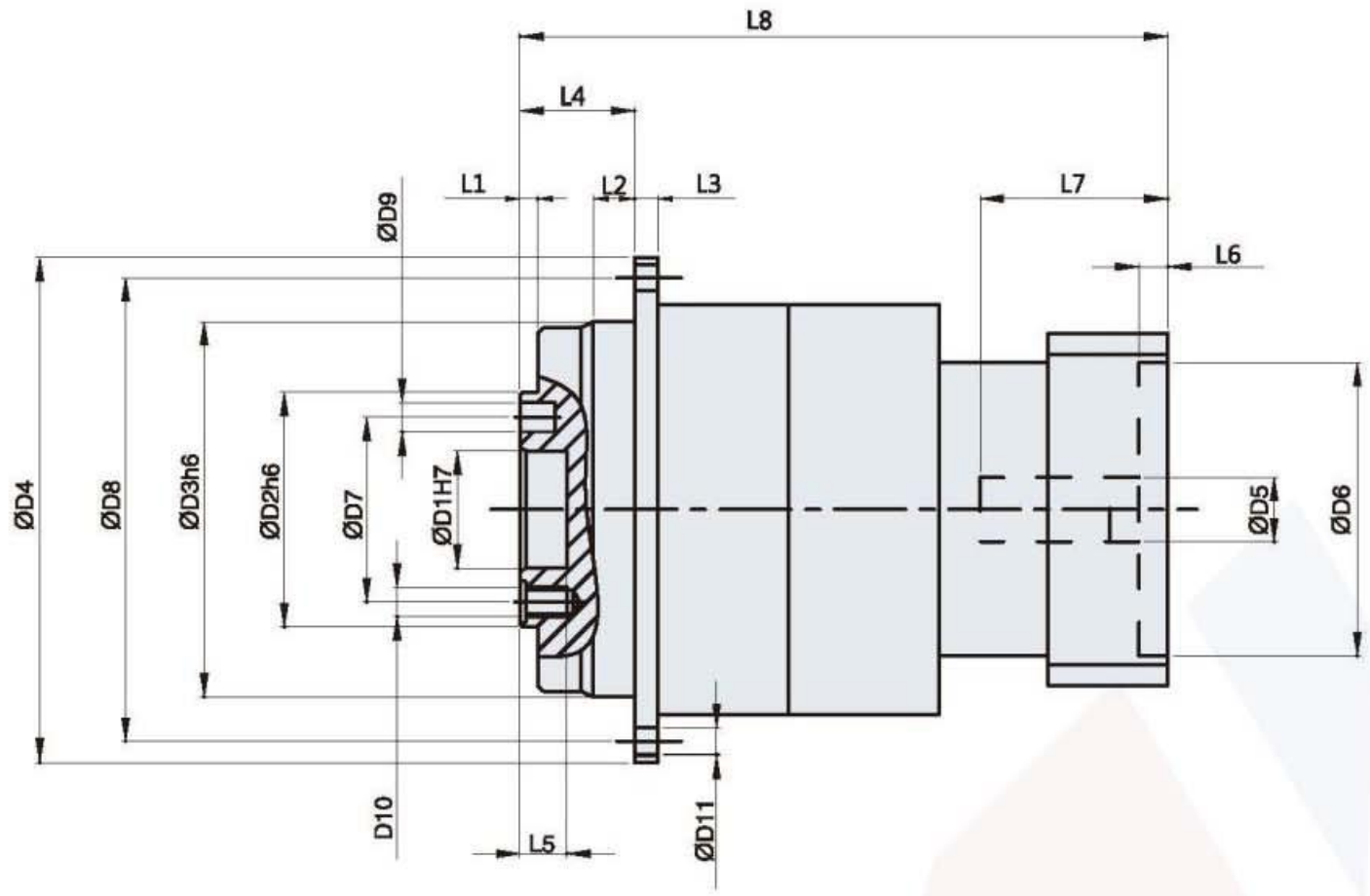

Input

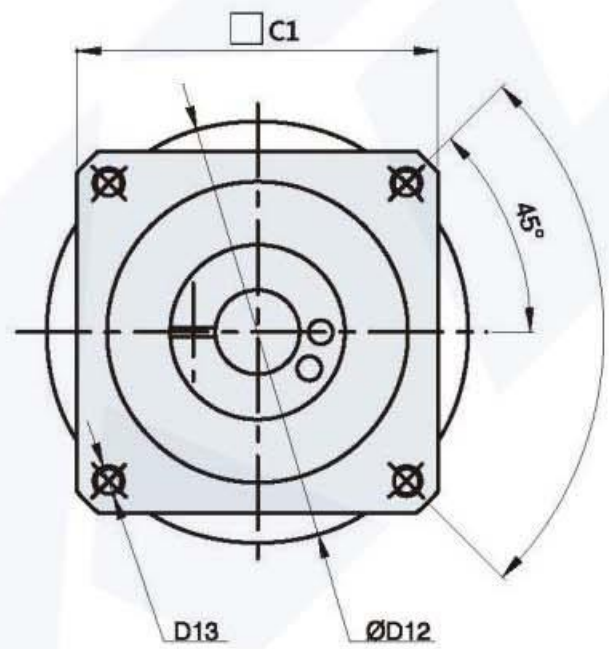

Unit:mm

	Code \ Model	PD047-L2	PD064-L2	PD090-L2	PD110-L2	PD140-L2	PD200-L2	PD255-L2
A	D1	12	20	31.5	40	50	80	100
	D2	28	40	63	80	100	160	180
	D3	47	64	90	110	140	200	255
	D4	72	86	118	145	179	247	300
	D5	≤11/≤12	11(8 ~ 14)	19(14 ~ 22)	19(22 ~ 28)	19(19 ~ 38)	35(24 ~ 48)	38(38 ~ 55)
	D6	30	30(30 ~ 50)	50(50 ~ 110)	70(70 ~ 110)	70(70 ~ 114.3)	110(110 ~ 200)	114.3(114.3 ~ 200)
	D7	20	31.5	50	63	80	125	140
	D8	67	79	109	135	168	233	280
	D9	Ø3	Ø5x (D)8	Ø6x (D)7	Ø6x (D)7	Ø8x (D)7	Ø10x (D)10	Ø12x (D)10
	D10	4-M3	7-M5x (D)8	8-M6x (D)12	11-M6x (D)12	11-M8x (D)17	11-M10x (D)20	12-M16x (D)25
	D11	8-Ø3.4	8-Ø4.5	8-Ø5.5	8-Ø5.5	12-Ø6.6	12-Ø9	16-Ø13.5
	D12	46	45(45 ~ 70)	70(70 ~ 145)	90(90 ~ 145)	90(90 ~ 200)	145(145 ~ 235)	200(200 ~ 235)
	D13	M4	M4 ~ M5	M5 ~ M8	M6 ~ M8	M5 ~ M12	M8 ~ M12	M12
B	L1	3	3	6	6	6	8	12
	L2	7	7	10	10	14.5	15	20
	L3	4	4	7	8	10	12	18
	L4	19.5	19.5	30	29	38	50	66
	L5	4	8	12	13	12	16	20
	L6	3.5	4 ~ 5	5 ~ 10	6 ~ 10	6 ~ 8	6 ~ 10	6 ~ 10
	L7	30	28(28 ~ 34)	34(34 ~ 59)	43(43 ~ 60)	65(65 ~ 85)	73(73 ~ 117)	73(73 ~ 117)
	L8	97.5	103(103 ~ 110)	123(123 ~ 139)	150(150 ~ 176)	195(195 ~ 211)	292(292 ~ 336)	306(306 ~ 322)
C	C1	48	60(40 ~ 60)	90(60 ~ 130)	90(90 ~ 130)	90(90 ~ 180)	180(130 ~ 220)	180(180 ~ 220)

SERVOBOX Planetary Reducers

MODEL： PD

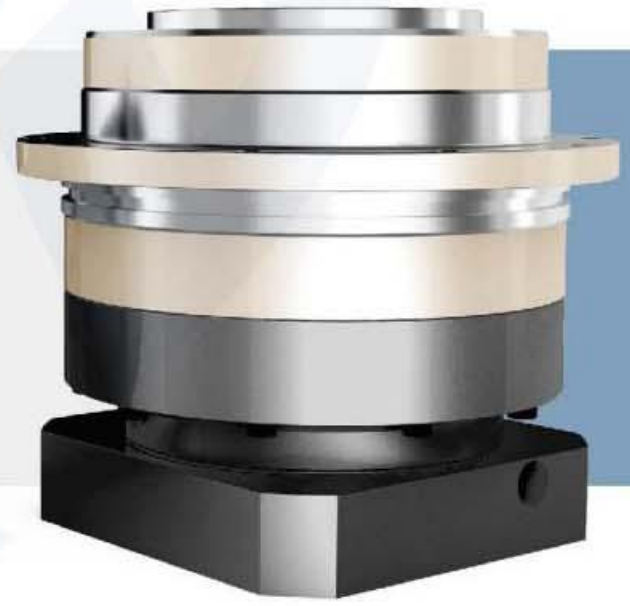

Output Dimensions：

PD047
OUTPUT

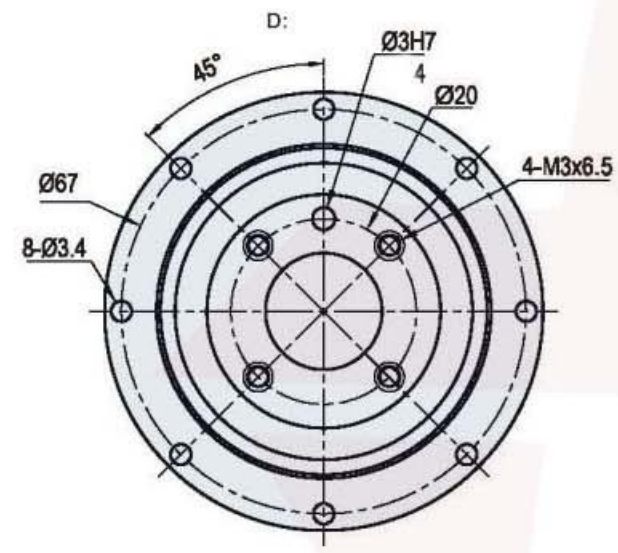

PD064
OUTPUT

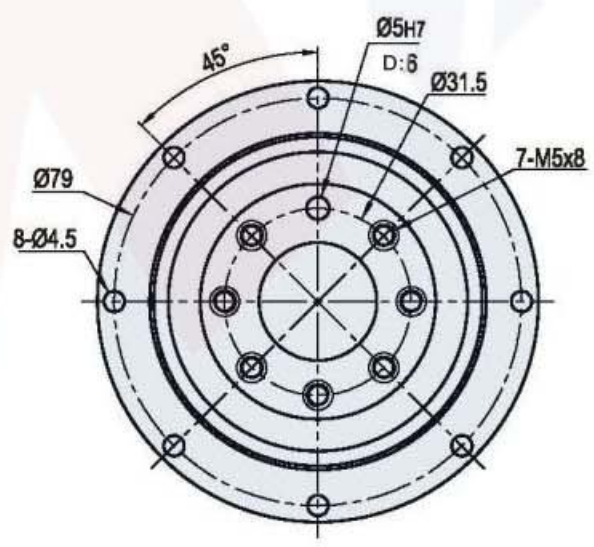

PD090
OUTPUT

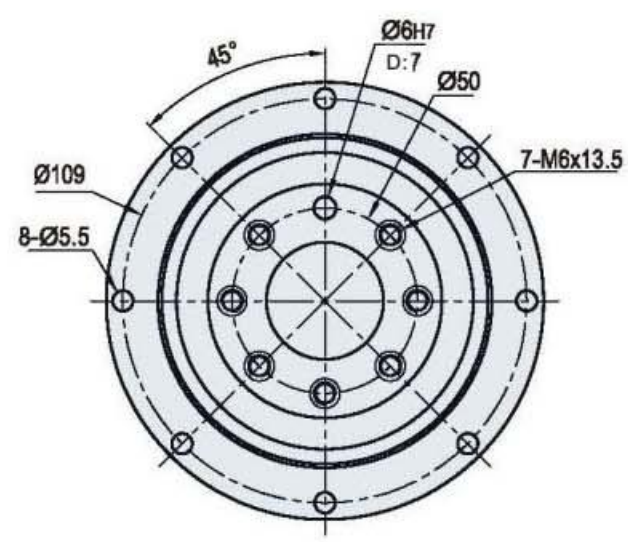

PD110
OUTPUT

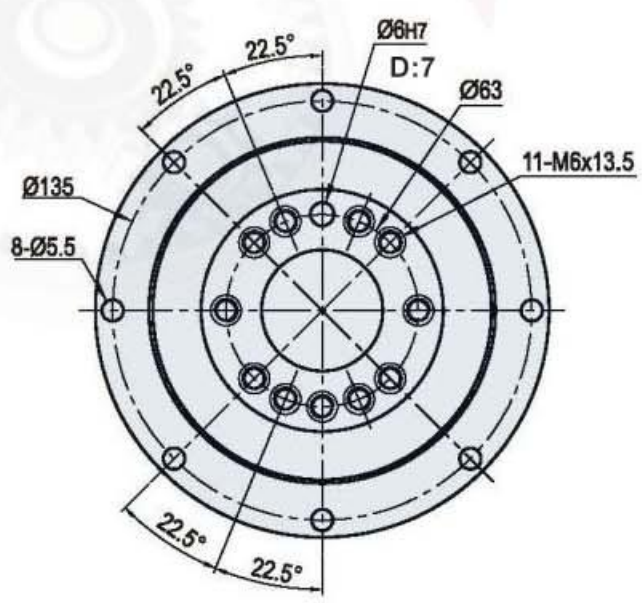

PD140
OUTPUT

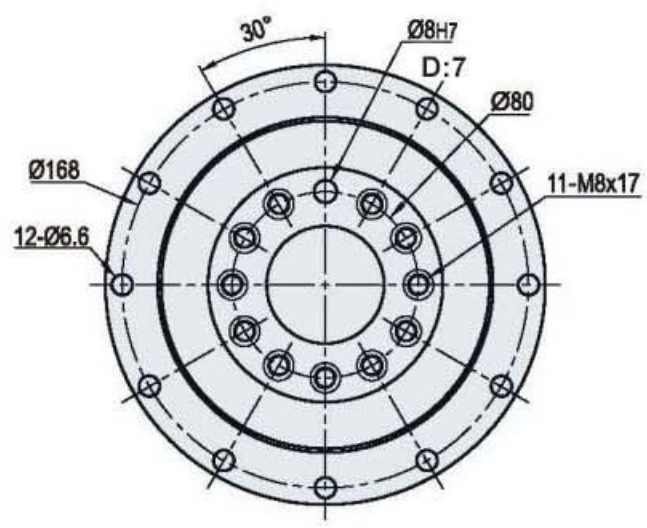

PD200
OUTPUT

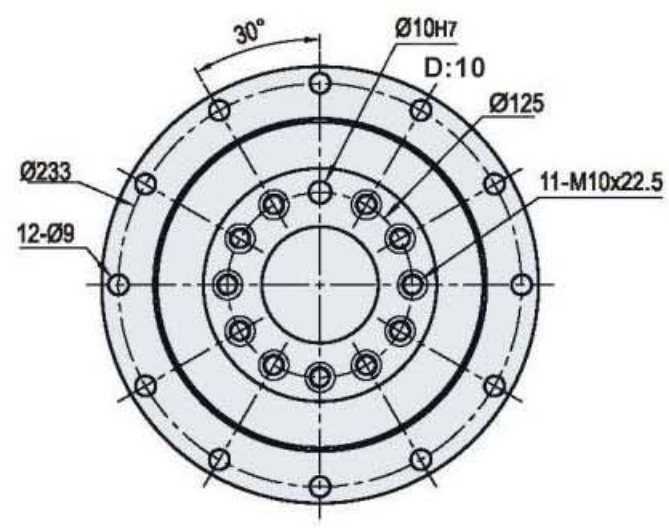

PD255
OUTPUT

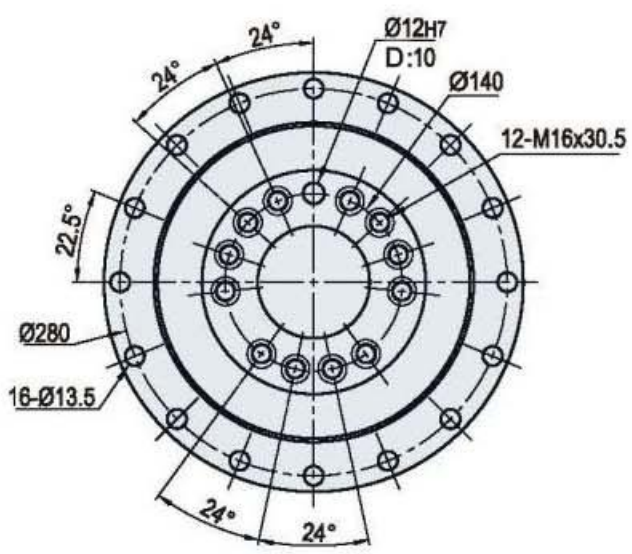

SDL Series

高精密法蘭輸出

High Precision Flange-output Gearbox

機種型號表示
Indication of Model Numbers

SDL090	–	10	–	S2	–	P1	MOTO
減速機型式 Reducer model		減速比 Ratio		出力軸鍵槽 Output Bearing		背隙等級 Backlash Class	馬達型號 Motor Type
SDL047 SDL064 SDL090 SDL110 SDL140 SDL200 SDL255		單段 1–Stage 3, 4, 5, 7, 10 雙段 2–Stage 15, 20, 25, 30, 35 40, 50, 70, 100		A: 標準品，滾珠軸承 Standard(Ball Bearing) T: 滾錐軸承 Taper Bearing		P0: 高精密背隙 High precision backlash P1: 精密背隙 Precision backlash P2: 標準背隙 Standard backlash	馬達制造商及型號 Motor Brand & Model No. （如下圖）

減速器匹配电机需要确认下列尺寸：
The gearbox matching motor needs to be confirmed with following dimensions :

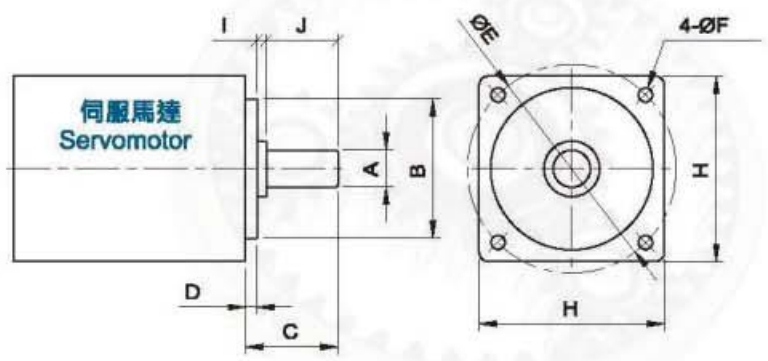

A	B	C	D	E	F	H	I	J

行星速機訂購編號

減速機型 Type	型號 Model	速比 Ratio	出力軸鍵槽 Output Shaft Keyway	背隙等級 Backlash Class	馬達型號 MOTOR NO.

SDL 減速機性能資料 Reducer Specifications

規格 Specs	單位 Unit	節數 Stage	減速比 Ratio	SDL047	SDL064	SDL090	SDL110	SDL140	SDL200	SDL255
額定輸出力矩T_{2N} Rated Output Torque	Nm	1	4	19	50	133	278	555	1050	1700
			5	22	60	160	330	650	1200	2000
			7	19	50	140	300	550	1100	1800
			10	14	40	100	230	450	900	1500
		2	20	19	50	133	278	555	1050	1700
			25	22	60	160	330	650	1200	2000
			35	19	50	140	300	550	1100	1800
			40	19	45	120	260	500	1000	1600
			50	22	60	160	330	650	1200	2000
			70	19	50	140	300	550	1100	1800
			100	14	40	100	230	450	900	1500
最大輸出扭矩T_{2NOT}[1]/ Max.Output Torque	Nm	1,2	4~100	3倍額定輸出力矩/3Times of Nominal Output Torque						
額定輸入轉速n_{1N}/Rated Input Speed	rpm	1,2	4~100	5000	5000	4000	4000	3000	3000	2000
最大輸入轉速n_{1B}/Max.Input Speed	rpm	1,2	4~100	10000	10000	8000	8000	6000	6000	4000
超精密背隙P0/Micro Backlash P0	arcmin	1	4~10	≤1	≤1	≤1	≤1	≤1	≤1	≤1
		2	12~100	≤3	≤3	≤3	≤3	≤3	≤3	≤3
精密背隙P1/Precision Backlash P1	arcmin	1	4~10	≤3	≤3	≤3	≤3	≤3	≤3	≤3
		2	20~100	≤5	≤5	≤5	≤5	≤5	≤5	≤5
標準背隙P2/Standard Backlash P2	arcmin	1	4~10	≤6	≤6	≤6	≤6	≤6	≤6	≤6
		2	20~100	≤8	≤8	≤8	≤8	≤8	≤8	≤8
扭轉剛性/Torsional Rigidity	Nm/arcmin	1,2	4~100	8	13	30	80	150	450	1010
最大彎曲力矩力N_{2KB}[3]	N	1,2	4~100	43	125	235	430	1300	3064	5900
容許軸向力F_{2aB}[2]/ Max.Axial Force	N	1,2	4~100	990	1050	2850	2990	10590	16660	29430
使用壽命/Service Life	hr	1,2	4~100	22000h						
效率 η /Efficiency	%	1	4~10	≥97%						
		2	20~100	≥94%						
重量/Weight	kg	1	4~10	0.7	1.3	3.2	5.8	12.3	33	57.9
		2	20~100	1	1.5	4.1	7.6	16.8	38	72.6
使用溫度/Operating Temperature	℃	1,2	4~100	(-15℃ ~ +90℃)						
潤滑/Lubrication		1,2	4~100	全合成潤滑油脂(Synthetic Grease)						
防護等級/Protection Class		1,2	4~100	IP65						
安裝方向/Mounting Position		1,2	4~100	任意方向(Any Direction)						
噪音值(n1=3000rpm，無負載)/Noise Level	dB(A)	1,2	4~100	≤58	≤59	≤62	≤65	≤68	≤69	≤70

減速機轉動慣量 Reducer Rotary Inertia

規格 Specs	單位 Unit	節數 Stage	減速比 Ratio	SDL047	SDL064	SDL090	SDL110	SDL140	SDL200	SDL255
轉動慣量J1 Moment of Inertia	$kg.cm^2$	1	4	0.03	0.14	0.48	2.74	7.54	23.67	54.37
			5	0.03	0.13	0.47	2.71	7.42	23.29	53.27
			7	0.03	0.13	0.45	2.62	7.14	22.48	50.97
			10	0.03	0.13	0.44	2.57	7.03	22.51	50.56
		2	20–40	0.03	0.03	0.13	0.47	2.71	7.42	23.29
			50–100	0.03	0.03	0.13	0.44	2.57	7.03	22.51

1. 減速比(i=Nin/Nout)。 2.最大加速力矩T2B=60% of T2NOT。

3. 輸出轉數100rpm時，作用于輸出法蘭位置，*連續運轉使用壽命爲15000hrs。

1. Ratio (i=Nin/Nout) . 2. 2.The Max. acceleration torque T2B=60% of T2NOT.

3. When output speed is 100rpm, acting on the output shaft center position *Continuous operation, service life is 15000hrs.

SERVOBOX Planetary Reducers

MODEL： SDL

單段 1-Stage

速比 Ratio：3，4，5，7，10

外形尺寸圖 Dimensions：

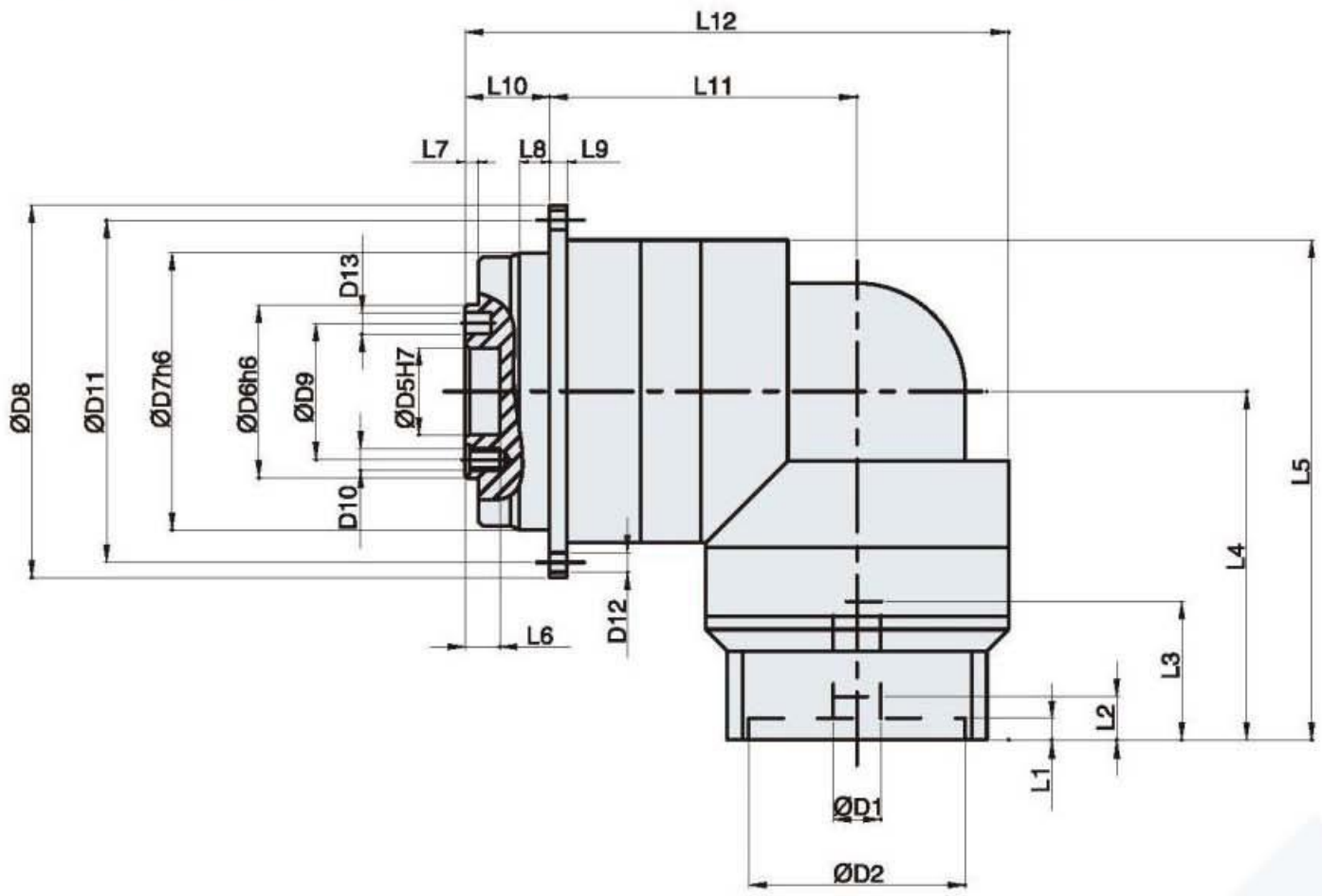

輸入端 Input

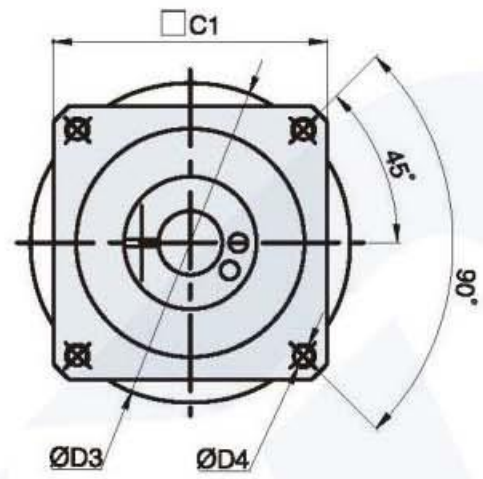

Unit:mm

	型號 Model / 代碼 Code	SDL047-L1	SDL064-L1	SDL090-L1	SDL110-L1	SDL140-L1	SDL200-L1	SDL255-L1
A	D1	≤11/≤12	11(11 ~ 14)	19(19 ~ 24)	24(22 ~ 32)	32(24 ~ 35)	≤48	≤55
	D2	30	50	70(70 ~ 110)	110(110 ~ 130)	110(110 ~ 114.3)	85	116
	D3	46	70	90(90 ~ 145)	145(145 ~ 165)	145(145 ~ 200)	215	235
	D4	M4	M4	M8	M8 ~ M10	M8 ~ M12	M12	M12
	D5	12	20	31.5	40	50	80	100
	D6	28	40	63	80	100	160	180
	D7	47	64	90	110	140	200	255
	D8	72	86	118	145	179	247	300
	D9	20	31.5	50	63	80	125	140
	D10	4-M3	7-M5x深度(D)8	8-M6x深度(D)12	11-M6x深度(D)12	11-M8x深度(D)17	11-M10x深度(D)20	12-M16x深度(D)25
	D11	67	79	109	135	168	233	280
	D12	8-Ø3.4	8-Ø4.5	8-Ø5.5	8-Ø5.5	12-Ø6.6	12-Ø9	16-Ø13.5
	D13	Ø3	Ø5x深度(D)8	Ø6x深度(D)7	Ø6x深度(D)7	Ø8x深度(D)7	Ø10x深度(D)10	Ø12x深度(D)10
B	L1	(3.5)	(5)	(12)	(10)	(8)	(6)	(6)
	L2	8	10	13	19	17	20	24
	L3	30	32	42 ~ 47	57 ~ 60	67 ~ 77	85	116
	L4	74	80.5	107 ~ 112	134 ~ 147.5	166.5 ~ 167	213.5	268.5
	L5	104	115.5	152 ~ 157	195 ~ 208.5	217.5 ~ 241.5	316	398.5
	L6	6.5	8	12	13	12	22.5	30.5
	L7	3	3	6	6	6	8	12
	L8	7	7	10	11	15	15	20
	L9	4	4	7	8	10	12	18
	L10	19.5	19.5	25	29	38	50	66
	L11	60	71	102	130	142.5	189	216
	L12	107.5	125.5	172	220	255.5	334.5	392
C	C1	48	60	90(90 ~ 130)	130 ~ 160	130(130 ~ 220)	190	220

SERVOBOX Planetary Reducers

MODEL： SDL

雙段 2-Stage

速比 Ratio：15，20，25，30，35，40，50，70，100

外形尺寸圖 Dimensions：

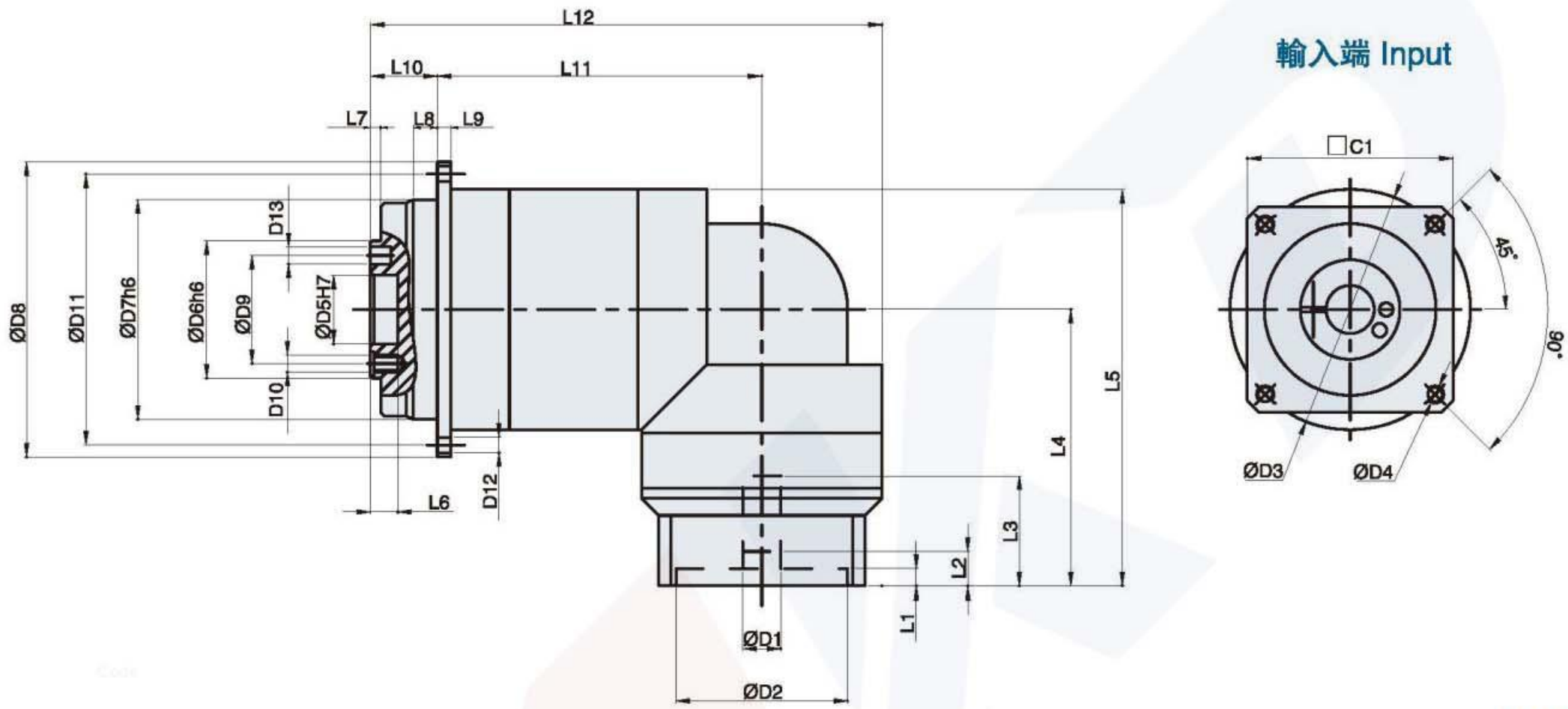

Unit:mm

	型號 Model / 代碼 Code	SDL047-L2	SDL064-L2	SDL090-L2	SDL110-L2	SDL140-L2	SDL200-L2	SDL255-L2
A	D1	≤11/≤12	11(11 ~ 14)	19(19 ~ 24)	24(22 ~ 32)	32(24 ~ 35)	≤48	≤55
	D2	30	50	70(70 ~ 110)	110(110 ~ 130)	110(110 ~ 114.3)	85	116
	D3	46	70	90(90 ~ 145)	145(145 ~ 165)	145(145 ~ 200)	215	235
	D4	M4	M4	M8	M8 ~ M10	M8 ~ M12	M12	M12
	D5	12	20	31.5	40	50	80	100
	D6	28	40	63	80	100	160	180
	D7	47	64	90	110	140	200	255
	D8	72	86	118	145	179	247	300
	D9	20	31.5	50	63	80	125	140
	D10	4-M3	7-M5x深度(D)8	8-M6x深度(D)12	11-M6x深度(D)12	11-M8x深度(D)17	11-M10x深度(D)20	12-M16x深度(D)25
	D11	67	79	109	135	168	233	280
	D12	8-Ø3.4	8-Ø4.5	8-Ø5.5	8-Ø5.5	12-Ø6.6	12-Ø9	16-Ø13.5
	D13	Ø3	Ø5x深度(D)8	Ø6x深度(D)7	Ø6x深度(D)7	Ø8x深度(D)7	Ø10x深度(D)10	Ø12x深度(D)10
B	L1	(3.5)	(5)	(12)	(10)	(8)	(6)	(6)
	L2	8	10	13	19	17	20	24
	L3	30	32	42 ~ 47	57 ~ 60	67 ~ 77	85	116
	L4	74	80.5	107 ~ 112	134 ~ 147.5	166.5 ~ 167	213.5	268.5
	L5	103	115.5	152 ~ 157	195 ~ 208.5	217.5 ~ 241.5	269.5	340
	L6	4	8	12	13	12	22.5	30.5
	L7	3	3	6	6	6	8	12
	L8	7	7	10	11	15	15	20
	L9	4	4	7	8	10	12	18
	L10	19.5	19.5	30	29	38	50	66
	L11	79	94.5	117	163.5	187	243	270
	L12	122	149	187	253.5	300	382	403
C	C1	48	60	90(90 ~ 130)	130 ~ 160	130(130 ~ 220)	190	220

SERVOBOX Planetary Reducers

MODEL： SDL

輸出端尺寸圖： Output Dimensions：

SDL047
输出端/ OUTPUT

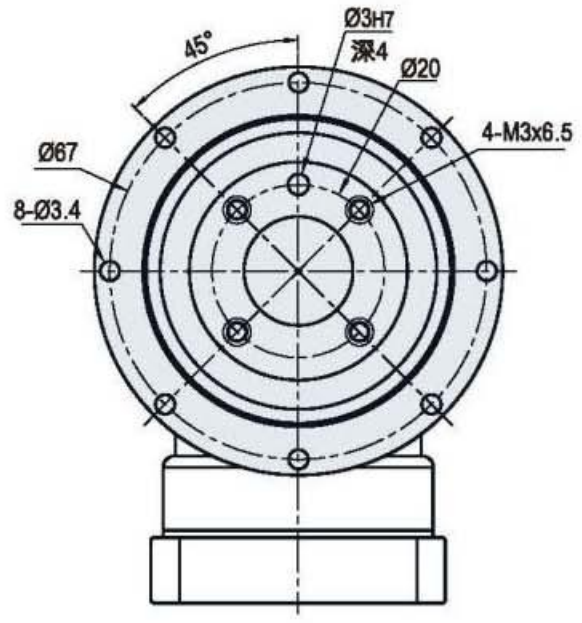

SDL064
输出端/ OUTPUT

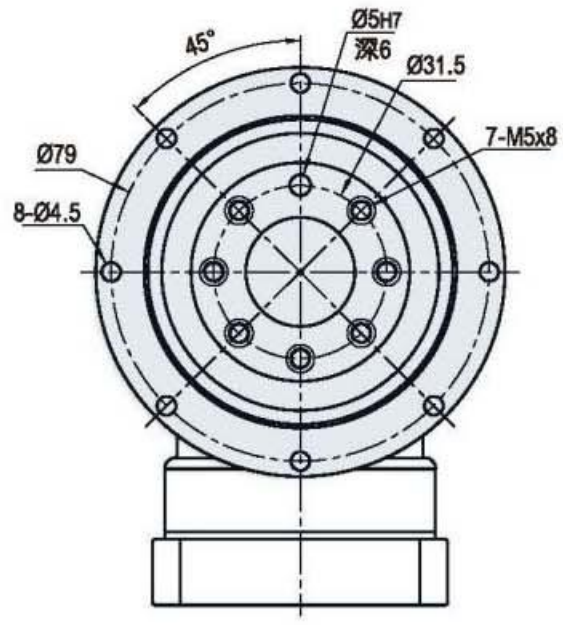

SDL090
输出端/ OUTPUT

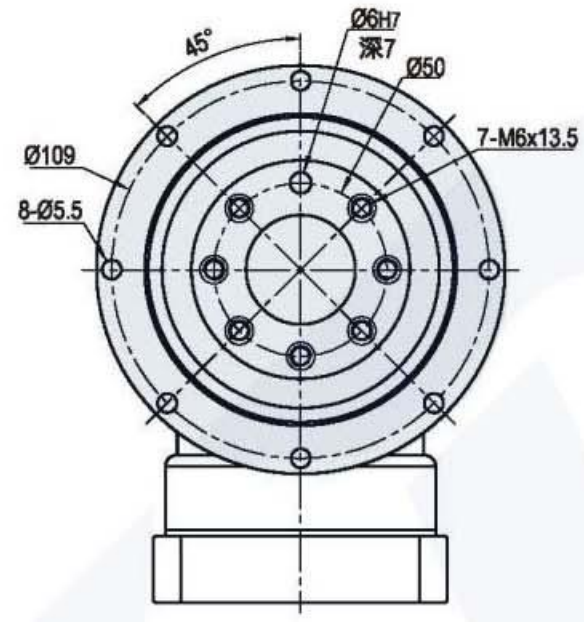

SDL110
输出端/ OUTPUT

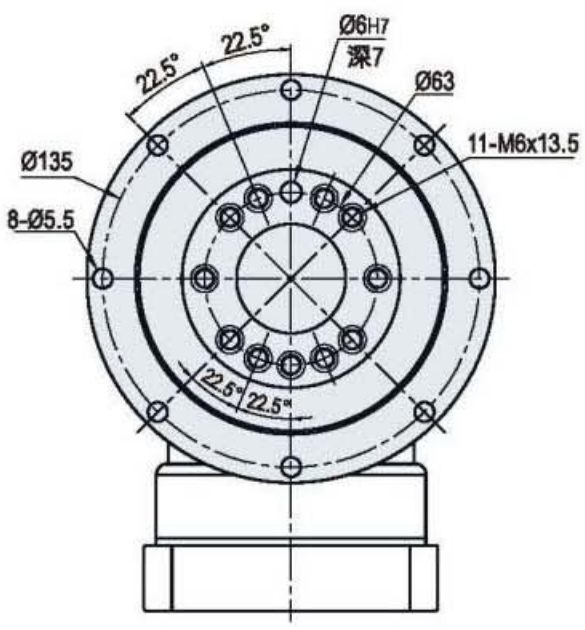

SDL140
输出端 / OUTPUT

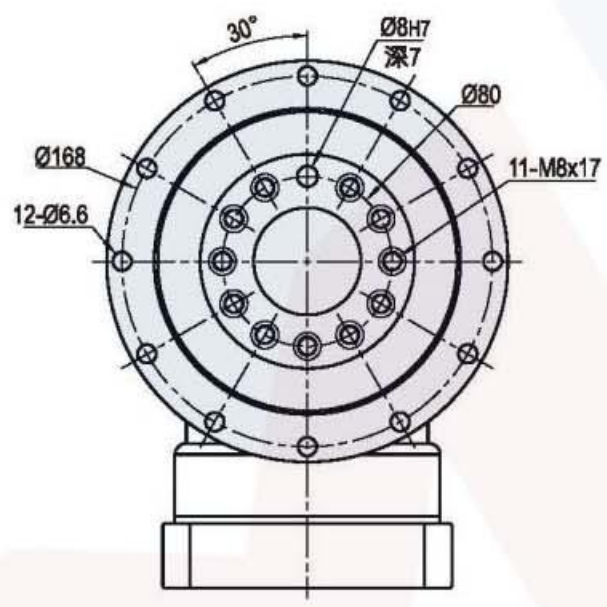

SDL200
输出端 / OUTPUT

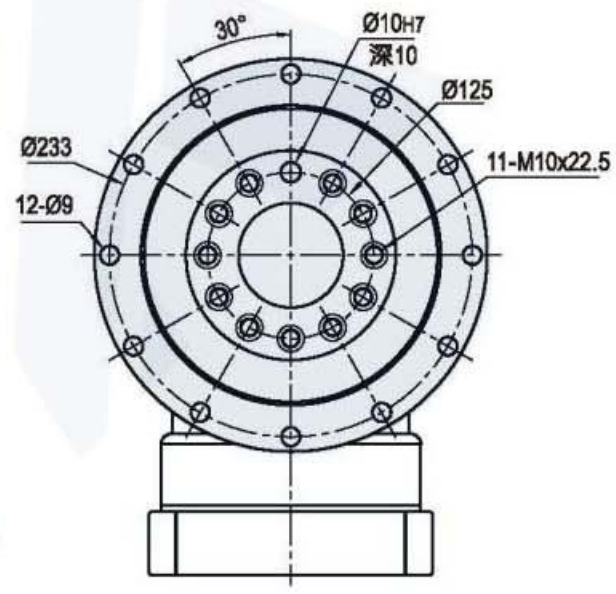

SDL255
输出端 / OUTPUT

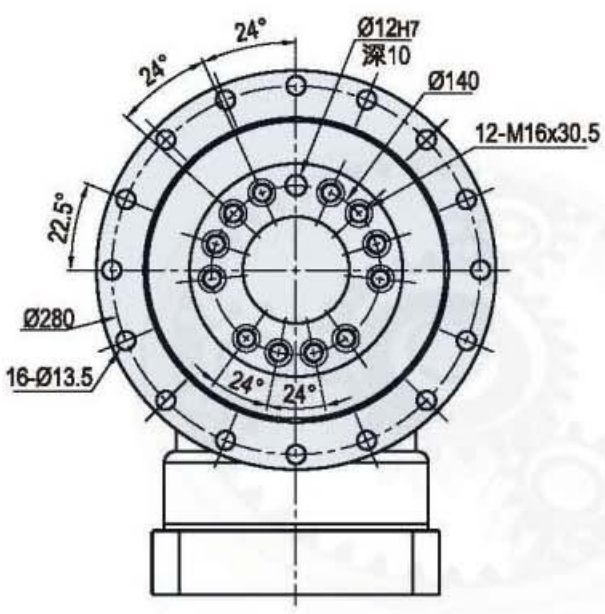

PRECISION PLANETARY GEARBOX

VRL

- Quiet operation
  Helical gears are used to achieve smooth and quiet operation.
- High precision
  The backlash is less than 3 arcmin and the positioning is accurate.
- High rigidity & torqueThe use of integral ball bearings greatly improves the rigidity and torque.
- Methods of flange and connector
  It can be installed on any motor in the world.
- No grease leakage
  The use of grease with high viscosity which is not easy to separate effectively prevents the grease leakage.
- Convenient maintenance
  No need to replace the grease in the product life period , and the installation is more convenient.

Model Selection of Speed Reducers

VRL Type

VRL090 – 10 – S1 – P1 / Motor

Reducer Model

VRL050, VRL070, VRL090, VRL120, VRL155, VRL205, VRL235

Output Shaft Keyway

S1:(Solid Output Shaft No Keyway)
S2Standard (Keyway)
S3: Output for holes

Motor Model

Motor Manufacturer & Model

Ratio

1-stage: 3, 4, 5, 6, 7, 8, 9, 10
2-stage: 15, 20, 25, 30, 35, 40, 45, 50, 60, 70, 80, 90, 100

Backlash Grade

P0: High precision backlash
P1: Precision backlash
P2: Standard backlash

Model Example: VRL090-100-S2-P1/Panasonic MSMJ 082S1A

VRL Reducer Specifications

Specs	Unit	Stage	Ratio	VRL050	VRL070	VRL090	VRL120	VRL155	VRL205	VRL235
Rated Output Torque / T_{2N}	Nm	1	3	20	55	130	208	342	588	1140
			4	19	50	140	290	542	1050	1700
			5	22	60	160	330	650	1200	2000
			6	20	55	150	310	600	1100	1900
			7	19	50	140	300	550	1100	1800
			8	17	45	120	260	500	1000	1600
			9	14	40	100	230	450	900	1500
			10	14	40	100	230	450	900	1500
		2	15	20	55	130	208	342	588	1140
			20	19	50	140	290	542	1050	1700
			25	22	60	160	330	650	1200	2000
			30	20	55	150	310	600	1100	1900
			35	19	50	140	300	550	1100	1800
			40	17	45	120	260	500	1000	1600
			45	14	40	100	230	450	900	1500
			50	22	60	160	330	650	1200	2000
			60	20	55	150	310	600	1100	1900
			70	19	50	140	300	550	1100	1800
			80	17	45	120	260	500	1000	1600
			90	14	40	100	230	450	900	1500
			100	14	40	100	230	450	900	1500
Max.Output Torque / T_{2NOT}[1]/	Nm	1,2	3~100	3Times of Nominal Output Torque						
Rated Input Speed / n_{1N}	rpm	1,2	3~100	5000	5000	4000	4000	3000	3000	2000
Max.Input Speed / n_{1B}	rpm	1,2	3~100	10000	10000	8000	8000	6000	6000	4000
Precision Backlash P1	arcmin	1	3~10	≤2	≤2	≤2	≤2	≤2	≤2	≤2
		2	15~100	≤4	≤4	≤4	≤4	≤4	≤4	≤4
Standard Backlash P2	arcmin	1	3~10	≤4	≤4	≤4	≤4	≤4	≤4	≤4
		2	15~100	≤6	≤6	≤6	≤6	≤6	≤6	≤6
Torsional Rigidity	Nm/arcmin	1,2	3~100	3	7	14	25	50	145	225
Max.Radial Force / F_{2rB}[2]	N	1,2	3~100	680	1260	2880	6000	8200	12800	27800
Max.Axial Force / F_{2a1B}[2]	N	1,2	3~100	330	625	1250	2400	3890	6100	15000
Max.Axial Force / F_{2a1B}[2]	N	1,2	3~100	370	760	1580	3360	4660	7250	18500
Service Life	hr	1,2	3~100	20000h						
Efficiency / η	%	1	3~10	≥97%						
		2	15~100	≥94%						
Weight	kg	1	3~10	0.5	1.2	3.5	7.8	14.5	30	50
		2	15~100	0.8	1.4	4.1	9	17.5	33	63
Operating Temperature	℃	1,2	3~100	(-15℃ ~ +90℃)						
Lubrication		1,2	3~100	(Synthetic Grease)						
Protection Class		1,2	3~100	IP65						
Mounting Position		1,2	3~100	(Any Direction)						
Noise Level(n1=3000rpm, No load)	dB(A)	1,2	3~100	≤56	≤58	≤60	≤63	≤65	≤67	≤70

Reducer Rotary Inertia

Specs	Unit	Stage	Ratio	VRL050	VRL070	VRL090	VRL120	VRL155	VRL205	VRL235
Moment of Inertia	$kg.cm^2$	1	3	0.03	0.16	0.61	3.25	9.21	28.98	69.61
			4	0.03	0.14	0.48	2.74	7.54	23.67	54.37
			5	0.03	0.13	0.47	2.71	7.42	23.29	53.27
			6	0.03	0.13	0.45	2.65	7.25	22.75	51.72
			7	0.03	0.13	0.45	2.62	7.14	22.48	50.97
			8	0.03	0.13	0.44	2.58	7.07	22.59	50.84
			9	0.03	0.13	0.44	2.57	7.04	22.53	50.63
			10	0.03	0.13	0.44	2.57	7.03	22.51	50.56
		2	12–40	0.03	0.03	0.13	0.47	2.71	7.42	23.29
			50–100	0.03	0.03	0.13	0.44	2.57	7.03	22.51

1. Ratio (i=Nin/Nout)
2. Output revolutions 100rpm, acting on the output shaft center position.
3. The Max. acceleration torque T2B=60% of T2NOT, continuous operation, service life is 10000hrs.

MODEL: VRL

1–Stage

Ratio: 3, 4, 5, 6, 7, 8, 9, 10

Dimensions:

Output

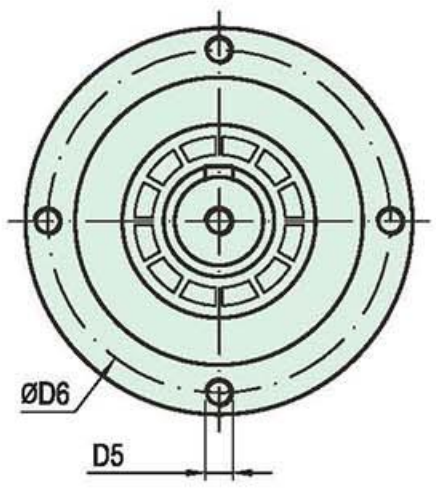

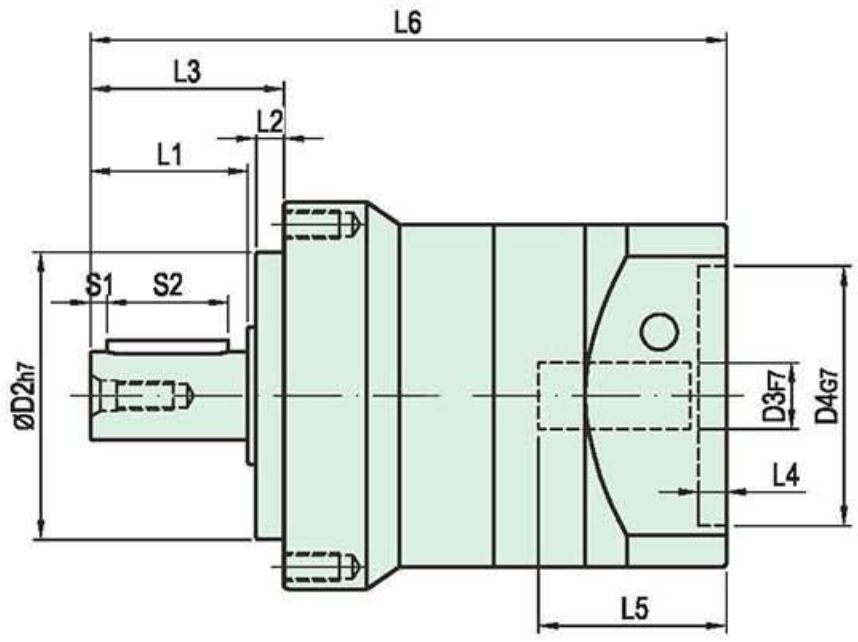

Input

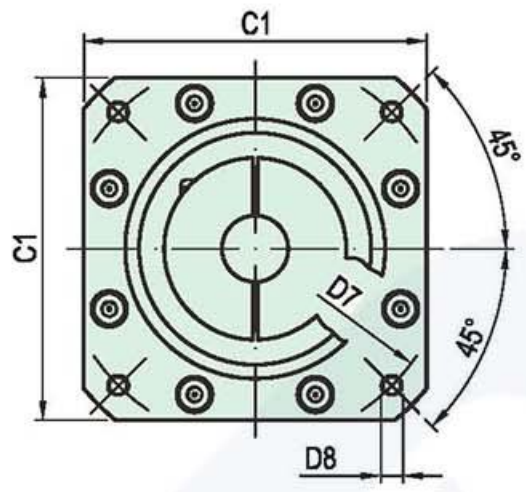

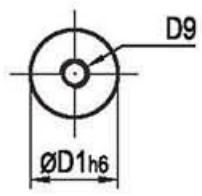

Output shaft type S1

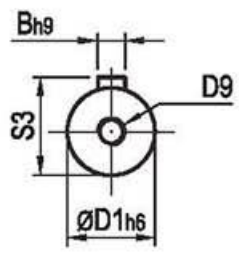

Output shaft type S2

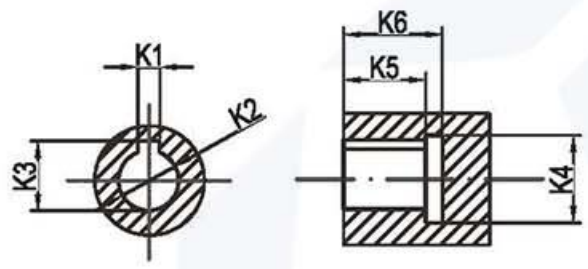

Output hole type S3

Unit:mm

Size	VRL070–L1	VRL090–L1	VRL120–L1	VRL155–L1	VRL205–L1	VRL235–L1
D1	ϕ16	ϕ22	ϕ32	ϕ40	ϕ55	ϕ75
D2	ϕ52	ϕ68	ϕ90	ϕ120	ϕ160	ϕ180
D3	ϕ14 (ϕ11–14)	ϕ19 (ϕ16–24)	ϕ22 (ϕ19–35)	ϕ24 (ϕ22–35)	ϕ35 (ϕ35– ϕ42)	ϕ42 (ϕ35–55)
D4	ϕ50 (ϕ50–70)	ϕ70 (ϕ70– ϕ110)	ϕ110 (ϕ114.3)	ϕ110 (ϕ114.3)	ϕ114.3 (ϕ114.3–200)	ϕ180 (ϕ114.3~200)
D5	4–M5X10L	4–M6X12L	4–M8X16L	4–M10X20L	4–M12X22L	4–M16X28L
D6	ϕ62	ϕ80	ϕ108	ϕ140	ϕ184	ϕ210
D7	ϕ70 (ϕ70–90)	ϕ90 (ϕ90–145)	ϕ145 (ϕ145–200)	ϕ145 (ϕ145–200)	ϕ200 (ϕ200–235)	ϕ215 (ϕ200~235)
D8	4–M5 (M4–M6)	4–M6 (M5–M8)	4–M8 (M8–M12)	4–M8 (M8–M12)	4–M12	4–M12
D9	M5X0.8P	M8X1.25P	M12X1.75P	M16X2P	M20X2.5P	M20X2.5P
L1	28.5	36.5	51	79	82	105
L2	5	6	9	12	15	18
L3	35	44	62	94	100	126
L4	5	7~8	6~11	8~11	7~10	8~15
L5	34 (≤44)	44 (≤60)	64.5 (≤81.5)	72.5 (≤82)	85 (≤120)	109 (≤119)
L6	115 (115–125)	146 (146–162)	201 (201–218)	251.5 (251.5–261)	284 (284–319)	358 (358–368)
C1	65 (65–80)	90 (90–130)	130 (130–180)	150 (150–180)	180 (180–220)	200 (200–220)
S1	3	4	5	5	6	7
S2	22	28	40	65	70	90
S3	18	24.5	35	43	59	79.5
B	5	6	10	12	16	20
K1	4	6	8	10	14	18
K2	ϕ11	ϕ22	ϕ28	ϕ38	ϕ50	ϕ60
K3	12.8	24.5	31.3	41.3	53.8	64.4
K4	ϕ16	ϕ32	ϕ38	ϕ48	ϕ60	ϕ72
K5	15	20	27	35	43	60
K6	18	24	32	40	50	65

Note 1: Inside of () is the optional range of sizes, outside of () is the standard sizes.

Note 2: The reducer output shaft size and length can be customized for customers.

Note 3: The input size can be changed according to the servomotor or stepper motor of each brand.

MODEL: VRL

2–Stage

Ratio: 15, 20, 25, 30, 35, 40, 45, 50, 60, 70, 80, 90, 100

Dimensions:

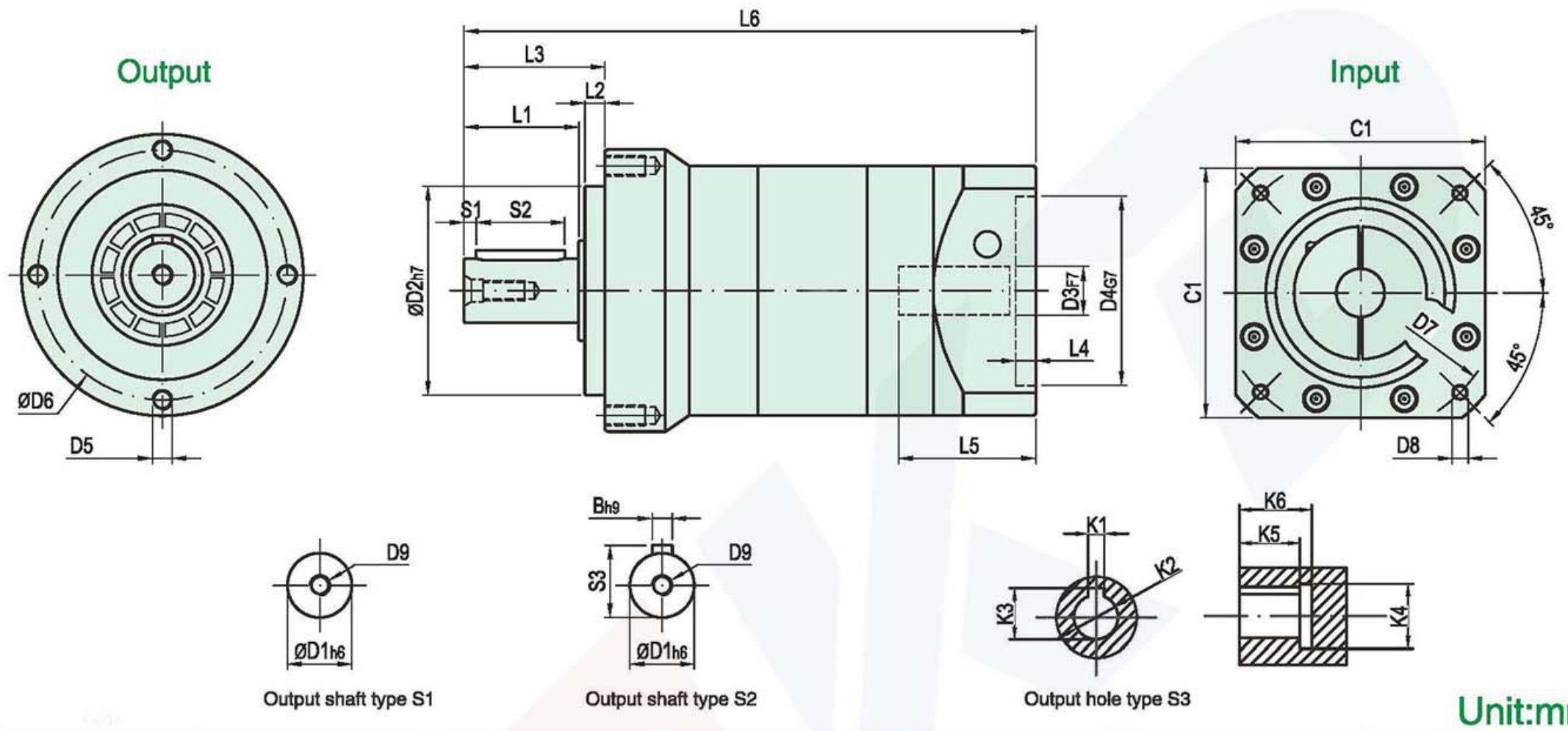

Output shaft type S1

Output shaft type S2

Output hole type S3

Unit:mm

Size	VRL070–L1	VRL090–L2	VRL120–L2	VRL155–L2	VRL205–L2	VRL235–L2
D1	ϕ16	ϕ22	ϕ32	ϕ40	ϕ55	ϕ75
D2	ϕ52	ϕ68	ϕ90	ϕ120	ϕ160	ϕ180
D3	ϕ14 (ϕ11–14)	ϕ19 (ϕ11–19)	ϕ22 (ϕ16–24)	ϕ24 (ϕ19–35)	ϕ35 (ϕ22–35)	ϕ42 (ϕ35–42)
D4	ϕ50	ϕ70 (ϕ50– ϕ80)	ϕ110 (ϕ70– ϕ110)	ϕ110 (ϕ114.3)	ϕ110 (ϕ114.3)	ϕ180 (ϕ114.3–200)
D5	4–M5X10L	4–M6X12L	4–M8X16L	4–M10X20L	4–M12X22L	4–M16X28L
D6	ϕ62	ϕ80	ϕ108	ϕ140	ϕ184	ϕ210
D7	ϕ70	ϕ90 (ϕ70–100)	ϕ145 (ϕ90–145)	ϕ145 (ϕ145–200)	ϕ145 (ϕ145–200)	ϕ215 (ϕ200–235)
D8	4–M5 (M4)	4–M6 (M4–M6)	4–M8 (M5–M8)	4–M8 (M8–M12)	4–M8 (M8–M12)	4–M12
D9	M5X0.8P	M8X1.25P	M12X1.75P	M16X2P	M20X2.5P	M20X2.5P
L1	28.5	36.5	51	79	82	105
L2	5	6	9	12	15	18
L3	35	44	62	94	100	126
L4	5	5	8 (7–8)	11 (6–11)	8 (8–11)	8 (7–10)
L5	34	34 (≤44)	44 (≤60)	64.5 (≤81.5)	72.5 (≤82)	85 (≤120)
L6	142	172.5 (162.5–172.5)	230.5 (214.5–230.5)	286 (286–303)	340 (330.5–340)	407 (402–437)
C1	65	80 (65–86)	130 (90–130)	130 (130–180)	150 (150–180)	200 (180–220)
S1	3	4	5	5	6	7
S2	22	28	40	65	70	90
S3	18	24.5	35	43	59	79.5
B	5	6	10	12	16	20
K1	4	6	8	10	14	18
K2	ϕ11	ϕ22	ϕ28	ϕ38	ϕ50	ϕ60
K3	12.8	24.5	31.3	41.3	53.8	64.4
K4	ϕ16	ϕ32	ϕ38	ϕ48	ϕ60	ϕ72
K5	15	20	27	35	43	60
K6	18	24	32	40	50	65

Note 1: Inside of () is the optional range of sizes, outside of () is the standard sizes.

Note 2: The reducer output shaft size and length can be customized for customers.

Note 3: The input size can be changed according to the servomotor or stepper motor of each brand.

PRECISION PLANETARY GEARBOX

PFR

- Space–saving
  The straight cross reducer uses spiral bevel gear. The installation of the motor can achieve 90 degree bending and save the installation space.
- High rigidity & torque
  The use of integral ball bearings greatly improves the rigidity and torque.
- Connector and shaft sleeve mode
  It can be installed on any motor in the world.
- No grease leakage
  The use of grease with high viscosity which is not easy to separate effectively prevents the grease leakage.
- Convenient maintenance
  No need to replace the grease in the product life period , and the installation is more convenient.

Model Selection of Speed Reducers

PFR Type

PFR080 – 10 – S1 – P1 / Motor

Reducer Model

PFR040, PFR060, PFR080,
PFR120, PFR160

Output Shaft Keyway

S1:(Solid Output Shaft No Keyway)
S2: Standard (Keyway)
S3: Output for holes

Motor Model

Motor Manufacturer & Model

Ratio

1–stage: 3,4,5,6,7,8,9,10
2–stage: 12,15,16,20,25,28,30,35,40,50,70,80,100
3–stage: 60,64,72,80,90,100,120,144,150,160,180,200,
240,258,288,320,384,512,600,800,1000

Backlash Grade

P0: High precision backlash
P1: Precision backlash
P2: Standard backlash

Model Example: PFR080–100–S2–P1/Panasonic MSMJ 082S1A

PFR Reducer Specifications

Specs	Unit	Stage	Ratio	PFR040	PFR060	PFR080	PFR120	PFR160
Rated Output Torque / T_{2N}	Nm	1	3	17	28	112	165	423
			4	15	38	110	146	364
			5	14	40	108	160	423
			7	13	35	105	149	358
			10	12	25	100	141	293
		2	15	17	28	112	165	423
			20	15	38	110	146	364
			25	14	40	108	160	423
			30	13	28	112	165	423
			35	13	35	105	149	358
			40	12	38	110	146	364
			50	14	40	108	160	423
			70	13	35	105	149	358
			100	12	25	100	141	293
Max.Output Torque / T_{2NOT}[1]/	Nm	1,2	3~100	3Times of Nominal Output Torque				
Rated Input Speed / n_{1N}	rpm	1,2	3~100	3000	3000	3000	3000	2500
Max.Input Speed / n_{1B}	rpm	1,2	3~100	5000	5000	5000	5000	3600
Precision Backlash P1	arcmin	1	3~10	≤8	≤8	≤8	≤8	≤8
		2	12~100	≤10	≤10	≤10	≤10	≤10
Standard Backlash P2	arcmin	1	3~10	≤11	≤11	≤11	≤11	≤11
		2	12~100	≤13	≤13	≤13	≤13	≤13
Torsional Rigidity	Nm/arcmin	1,2	3~100	3	6	12	22	50
Max.Radial Force / F_{2rB}[2]	N	1,2	3~100	320	460	1300	3200	6520
Max.Axial Force / F_{2a1B}[2]	N	1,2	3~100	160	230	660	1600	3260
Service Life	hr	1,2	3~100	20000 h				
Efficiency / η	%	1	3~10	≥97%				
		2	15~100	≥94%				
Weight	kg	1	3~10	0.73	0.99	2.1	4.98	18.2
		2	15~100	1.05	1.46	3.2	6.92	24.9
Operating Temperature	℃	1,2	3~100	-25℃~+90℃				
Lubrication		1,2	3~100	Synthetic Grease				
Protection Class		1,2	3~100	IP65				
Mounting Position		1,2	3~100	Any Direction				
Noise Level(n1=3000rpm，No load)	dB(A)	1,2	3~100	≤62	≤63	≤65	≤67	≤68

Reducer Rotary Inertia

Specs	Unit	Stage	Ratio	PFR040	PFR060	PFR080	PFR120	PFR160
Moment of Inertia	$kg.cm^2$	1	3	0.16	0.63	3.48	12.84	36.72
			4	0.16	0.6	3.31	12.22	34.63
			5	0.16	0.59	3.28	12.1	34.24
			7	0.16	0.59	3.27	12.05	34.07
			10	0.16	0.59	3.26	12.03	34.02
		2	12–40	0.16	0.59	3.26	12.03	34.02
			50–100	0.16	0.59	3.26	12.03	34.02

1. The Max. acceleration torque T2B=60%
2.When output speed is 100rpm, acting on the output shaft center position
3. 3–stage big ratios are not in the above table. There is shaft lengthening and enlarging design. Please tell sales person if you need it.

MODEL: PFR

1-Stage

Ratio: 3, 4 , 5, 6, 7, 8, 9, 10, 14, 20

Dimensions:

Output

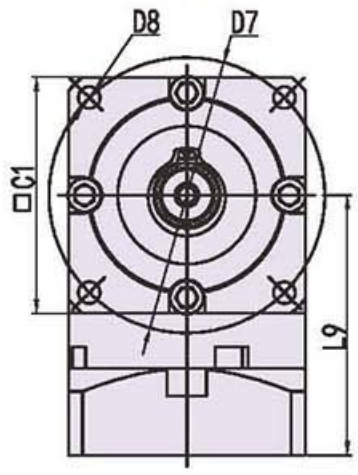

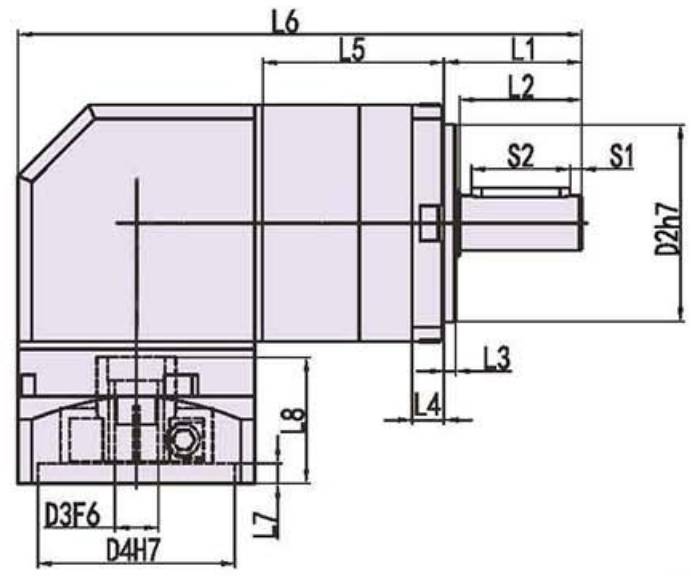

Input

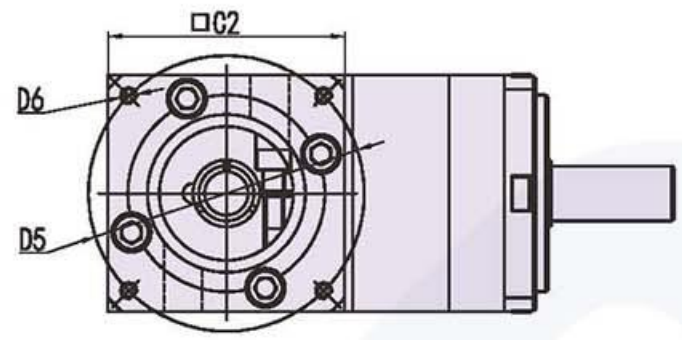

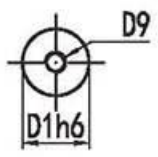

Output shaft type S1

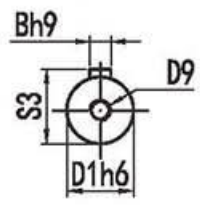

Output shaft type S2

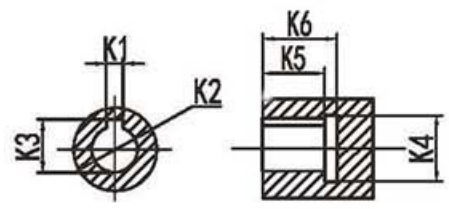

Output hole type S3

Unit:mm

Size	PFR060-L1	PFR080-L1	PFR120-L1	PFR160-L1
D1	ϕ14(16)	ϕ20 (22)	ϕ25 (32)	ϕ40
D2	ϕ50	ϕ80	ϕ110	ϕ130
D3	ϕ14 (ϕ6.35-19)	ϕ19 (ϕ11-24)	ϕ22 (ϕ16-24)	ϕ35 (ϕ22-38)
D4	ϕ50 (ϕ30-70)	ϕ70 (ϕ50-110)	ϕ110 (ϕ55.5-110)	ϕ114.3 (ϕ110-114.3)
D5	ϕ70 (ϕ45-90)	ϕ90 (ϕ70-145)	ϕ145 (ϕ90-155)	ϕ200 (ϕ145-200)
D6	4-M4 (M3-M6)	4-M5 (M4-M8)	4-M8 (M6-M12)	4-M12 (M8-M12)
D7	ϕ70	ϕ100	ϕ130	ϕ185
D8	4-ϕ5.5	4-ϕ6.5	4-ϕ8.5	4-ϕ11
D9	M5X0.8P	M8X1.25P	M10X1.5P	M16X2P
L1	35	40	55	87
L2	31	35	49	78
L3	3	3	4	5
L4	8	12	15	20
L5	46	55	80	111
L6	143	190	273	295
L7	5(4-6)	8(5-8)	8(5-8)	5 (5-7)
L8	32(32-44)	42(42-60)	70 (59-70)	86 (62-86)
L9	66(66-88)	95.5(95.5-113.5)	130 (119-130)	165.5 (165.5-189.5)
C1	60	90	120	160
C2	60(60-90)	90(90-130)	130 (120)	175 (142)
S1	3	3	5	5
S2	25	30	40	70
S3	16	22.5	28	43
B	5	6	8	12
K1	4	6	8	10
K2	ϕ11	ϕ22	ϕ28	ϕ38
K3	12.8	24.5	31.3	41.3
K4	ϕ16	ϕ32	ϕ38	ϕ48
K5	15	20	27	35
K6	18	24	32	40

MODEL: PFR

2-Stage

Ratio: 15, 20, 25, 30, 35, 40, 50, 70, 80, 100, 120, 140, 160, 180, 200

Dimensions:

Output

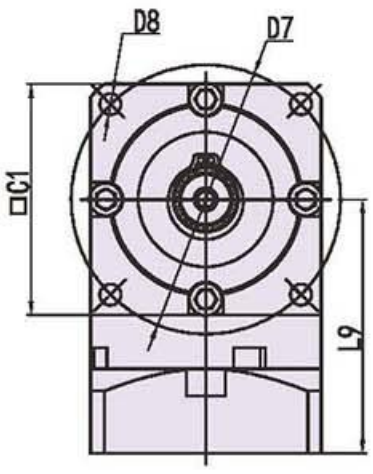

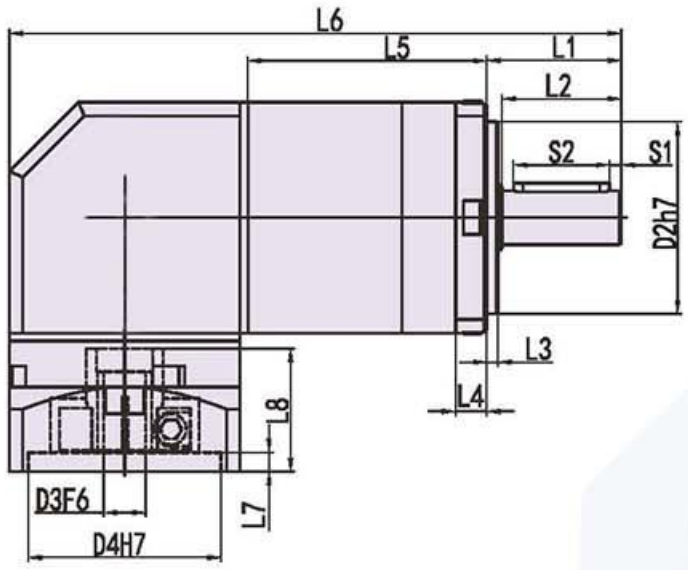

Input

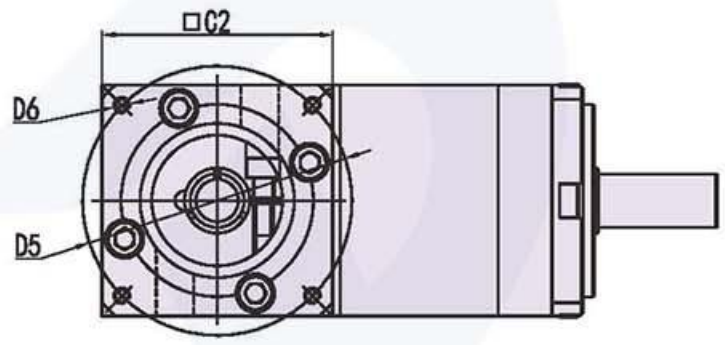

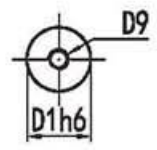

Output shaft type S1

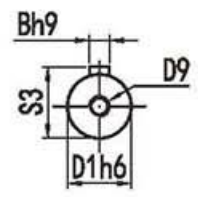

Output shaft type S2

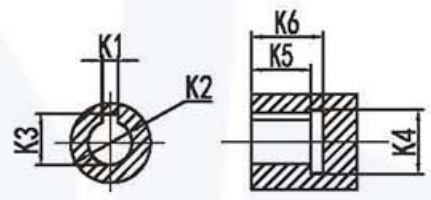

Output hole type S3

Unit:mm

Size Code	PFR060-L2	PFR080-L2	PFR120-L2	PFR160-L2
D1	ϕ14(16)	ϕ20 (22)	ϕ25 (32)	ϕ40
D2	ϕ50	ϕ80	ϕ110	ϕ130
D3	ϕ14 (ϕ6.35-19)	ϕ19 (ϕ11-24)	ϕ22 (ϕ16-24)	ϕ35 (ϕ22-38)
D4	ϕ50 (ϕ30-70)	ϕ70 (ϕ50-110)	ϕ110 (ϕ55.5-110)	ϕ114.3 (ϕ110-114.3)
D5	ϕ70 (ϕ45-90)	ϕ90 (ϕ70-145)	ϕ145 (ϕ90-155)	ϕ200 (ϕ145-200)
D6	4-M4 (M3-M6)	4-M5 (M4-M8)	4-M8 (M6-M12)	4-M12 (M8-M12)
D7	ϕ70	ϕ100	ϕ130	ϕ185
D8	4-ϕ5.5	4-ϕ6.5	4-ϕ8.5	4-ϕ11
D9	M5X0.8P	M8X1.25P	M10X1.5P	M16X2P
L1	35	40	55	87
L2	31	35	49	78
L3	3	3	4	5
L4	8	12	15	20
L5	62	78.5	110	149
L6	159	213.5	303	333
L7	5(4-6)	8(5-8)	8(5-8)	5 (5-7)
L8	32(32-44)	42(42-60)	70 (59-70)	86 (62-86)
L9	66(66-88)	95.5(95.5-113.5)	130 (119-130)	165.5 (165.5-189.5)
C1	60	90	120	160
C2	60(60-90)	90(90-130)	130 (120)	175 (142)
S1	3	3	5	5
S2	25	30	40	70
S3	16	22.5	28	43
B	5	6	8	12
K1	4	6	8	10
K2	ϕ11	ϕ22	ϕ28	ϕ38
K3	12.8	24.5	31.3	41.3
K4	ϕ16	ϕ32	ϕ38	ϕ48
K5	15	20	27	35
K6	18	24	32	40

PRECISION PLANETARY GEARBOX

PER

- Space–saving
  The straight cross reducer uses spiral bevel gear. The installation of the motor can achieve 90 degree bending and save the installation space.
- High rigidity & torque
  The use of integral ball bearings greatly improves the rigidity and torque.
- Connector and shaft sleeve mode
  It can be installed on any motor in the world.
- No grease leakage
  The use of grease with high viscosity which is not easy to separate effectively prevents the grease leakage.
- Convenient maintenance
  No need to replace the grease in the product life period , and the installation is more convenient.

Model Selection of Speed Reducers

PER Type

PER080 – 10 – S1 – P1 / Motor

Reducer Model

PER040, PER060, PER080
PER120, PER160

Output Shaft Keyway

S1:(Solid Output Shaft No Keyway)
S2: Standard (Keyway)
S3: Output for holes

Motor Model

Motor Manufacturer & Model

Ratio

1–stage: 3,4,5,6,7,8,9,10
2–stage: 12,15,16,20,25,28,30,35,40,50,70,80,100
3–stage: 60,64,72,80,90,100,120,144,150,160,180,200, 240,258,288,320,384,512,600,800,1000

Backlash Grade

P0: High precision backlash
P1: Precision backlash
P2: Standard backlash

Model Example: PER080–100–S2–P1/Panasonic MSMJ 082S1A

PER Reducer Specifications

Specs	Unit	Stage	Ratio	PER040	PER060	PER080	PER120	PER160
Rated Output Torque / T_{2N}	Nm	1	3	17	28	112	165	423
			4	15	38	110	146	364
			5	14	40	108	160	423
			7	13	35	105	149	358
			10	12	25	100	141	293
		2	15	17	28	112	165	423
			20	15	38	110	146	364
			25	14	40	108	160	423
			30	13	28	112	165	423
			35	13	35	105	149	358
			40	12	38	110	146	364
			50	14	40	108	160	423
			70	13	35	105	149	358
			100	12	25	100	141	293
Max.Output Torque / T_{2NOT}[1]/	Nm	1,2	3~100	3Times of Nominal Output Torque				
Rated Input Speed / n_{1N}	rpm	1,2	3~100	3000	3000	3000	3000	2500
Max.Input Speed / n_{1B}	rpm	1,2	3~100	5000	5000	5000	5000	3600
Precision Backlash P1	arcmin	1	3~10	≤8	≤8	≤8	≤8	≤8
		2	12~100	≤10	≤10	≤10	≤10	≤10
Standard Backlash P2	arcmin	1	3~10	≤11	≤11	≤11	≤11	≤11
		2	12~100	≤13	≤13	≤13	≤13	≤13
Torsional Rigidity	Nm/arcmin	1,2	3~100	3	6	12	22	50
Max.Radial Force / F_{2rB}[2]	N	1,2	3~100	320	460	1300	3200	6520
Max.Axial Force / F_{2a1B}[2]	N	1,2	3~100	160	230	660	1600	3260
Service Lite	hr	1,2	3~100	20000 h				
Efficiency / η	%	1	3~10	≥97%				
		2	15~100	≥94%				
Weight	kg	1	3~10	0.73	0.99	2.1	4.98	18.2
		2	15~100	1.05	1.46	3.2	6.92	24.9
Operating Temperature	℃	1,2	3~100	-25℃~+90℃				
Lubrication		1,2	3~100	Synthetic Grease				
Protection Class		1,2	3~100	IP65				
Mounting Position		1,2	3~100	Any Direction				
Noise Level(n1=3000rpm，No load)	dB(A)	1,2	3~100	≤62	≤63	≤65	≤67	≤68

Reducer Rotary Inertia

Specs	Unit	Stage	Ratio	PER040	PER060	PER080	PER120	PER160
Moment of Inertia	$kg.cm^2$		3	0.16	0.63	3.48	12.84	36.72
			4	0.16	0.6	3.31	12.22	34.63
		1	5	0.16	0.59	3.28	12.1	34.24
			7	0.16	0.59	3.27	12.05	34.07
			10	0.16	0.59	3.26	12.03	34.02
		2	12–40	0.16	0.59	3.26	12.03	34.02
			50–100	0.16	0.59	3.26	12.03	34.02

1. The Max. acceleration torque T2B=60% of T2NOT
2. When output speed is 100rpm, acting on the output shaft center position.
3. 3–stage big ratios are not in the above table. There is shaft lengthening and enlarging design. Please tell sales person if you need it.

MODEL: PER

1–Stage

Ratio: 3, 4 , 5, 6, 7, 8, 9, 10, 14, 20

Dimensions:

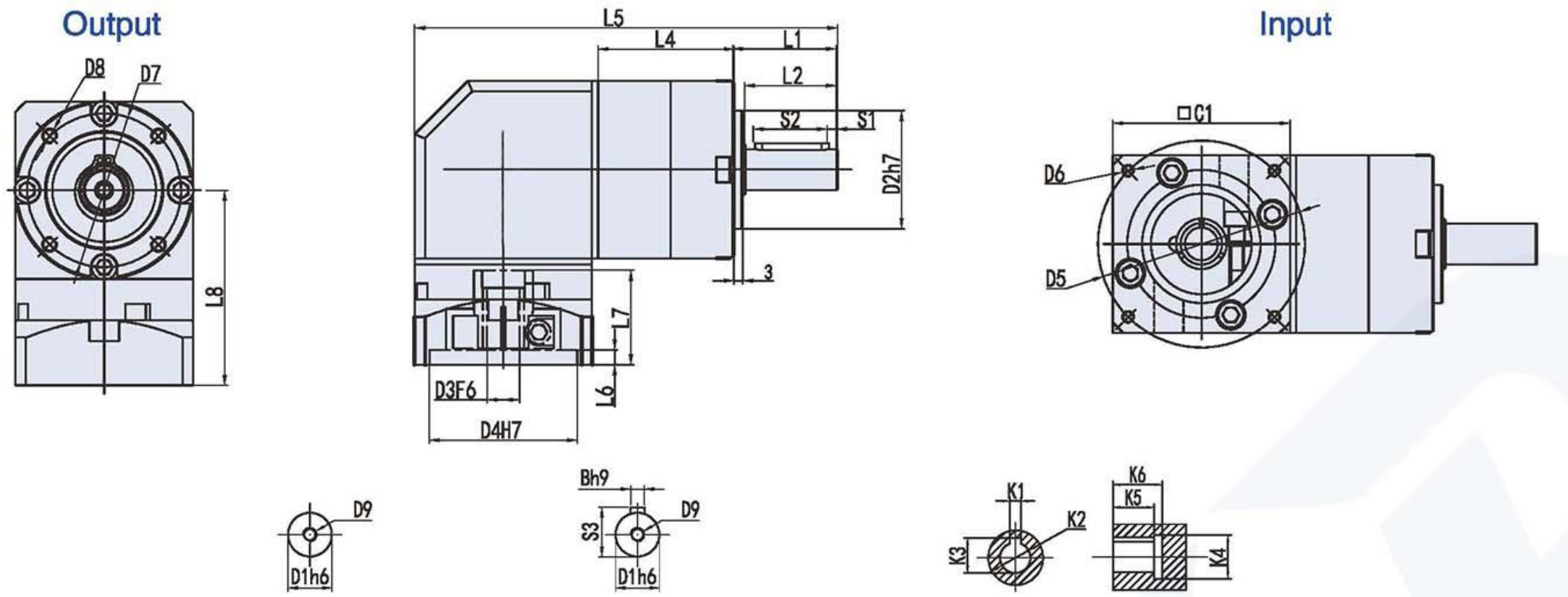

Output shaft type S1

Output shaft type S2

Output hole type S3

Unit:mm

Size	PER060–L1	PER080–L1	PER120–L1	PER160–L1
D1	ϕ14(16)	ϕ20 (22)	ϕ25 (32)	ϕ40
D2	ϕ40	ϕ60	ϕ80	ϕ130
D3	ϕ14 (ϕ6.35–19)	ϕ19 (ϕ11–24)	ϕ22 (ϕ16–24)	ϕ35 (ϕ22–38)
D4	ϕ50 (ϕ30–70)	ϕ70 (ϕ50–110)	ϕ110 (ϕ55.5–110)	ϕ114.3 (ϕ110–114.3)
D5	ϕ70 (ϕ45–90)	ϕ90 (ϕ70–145)	ϕ145 (ϕ90–155)	ϕ200 (ϕ145–200)
D6	4–M4 (M3–M6)	4–M5 (M4–M8)	4–M8 (M6–M12)	4–M12 (M8–M12)
D7	ϕ52	ϕ70	ϕ100	ϕ145
D8	4–M5X10L	4–M6X12L	4–M10X20L	4–M12X24L
D9	M5X0.8P	M8X1.25P	M10X1.5P	M16X2P
L1	35	40	55	87
L2	31	35	49	80
L3	3	3	4	5
L4	46	55	80	111
L5	143	190	273	295
L6	5(4–6)	8(5–8)	8(5–8)	5 (5–7)
L7	32(32–44)	42(42–60)	70 (59–70)	86 (62–86)
L8	66(66–88)	95.5(95.5–113.5)	130 (119–130)	165.5 (165.5–189.5)
C1	60(60–90)	90(90–130)	130 (120)	175 (142)
S1	3	3	5	5
S2	25	30	40	70
S3	16	22.5	28	43
B	5	6	8	12
K1	4	6	8	10
K2	ϕ11	ϕ22	ϕ28	ϕ38
K3	12.8	24.5	31.3	41.3
K4	ϕ16	ϕ32	ϕ38	ϕ48
K5	15	20	27	35
K6	18	24	32	40

MODEL: PER

2–Stage

Ratio: 15, 20, 25, 30, 35, 40, 50, 70, 80, 100, 120, 140, 160, 180, 200

Dimensions:

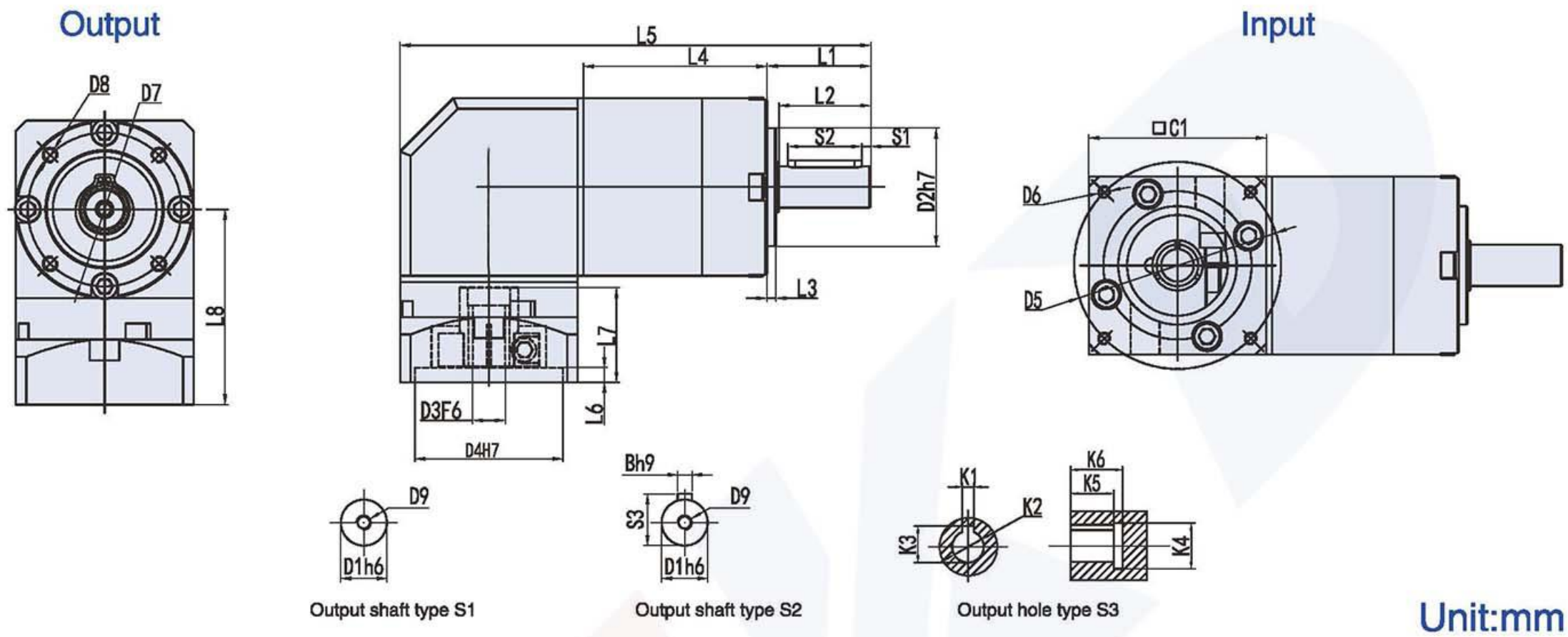

Output shaft type S1 | Output shaft type S2 | Output hole type S3

Unit:mm

Size / Code	PER060–L2	PER080–L2	PER120–L2	PER160–L2
D1	ϕ14(16)	ϕ20 (22)	ϕ25 (32)	ϕ40
D2	ϕ40	ϕ60	ϕ80	ϕ130
D3	ϕ14 (ϕ6.35–19)	ϕ19 (ϕ11–24)	ϕ22 (ϕ16–24)	ϕ35 (ϕ22–38)
D4	ϕ50 (ϕ30–70)	ϕ70 (ϕ50–110)	ϕ110 (ϕ55.5–110)	ϕ114.3 (ϕ110–114.3)
D5	ϕ70 (ϕ45–90)	ϕ90 (ϕ70–145)	ϕ145 (ϕ90–155)	ϕ200 (ϕ145–200)
D6	4–M4 (M3–M6)	4–M5 (M4–M8)	4–M8 (M6–M12)	4–M12 (M8–M12)
D7	ϕ52	ϕ70	ϕ100	ϕ145
D8	4–M5X10L	4–M6X12L	4–M10X20L	4–M12X24L
D9	M5X0.8P	M8X1.25P	M10X1.5P	M16X2P
L1	35	40	55	87
L2	31	35	49	80
L3	3	3	4	5
L4	62	78.5	110	149
L5	159	213.5	303	333
L6	5(4–6)	8(5–8)	8(5–8)	5 (5–7)
L7	32(32–44)	42(42–60)	70 (59–70)	86 (62–86)
L8	66(66–88)	95.5(95.5–113.5)	130 (119–130)	165.5 (165.5–189.5)
C1	60(60–90)	90(90–130)	130 (120)	175 (142)
S1	3	3	5	5
S2	25	30	40	70
S3	16	22.5	28	43
B	5	6	8	12
K1	4	6	8	10
K2	ϕ11	ϕ22	ϕ28	ϕ38
K3	12.8	24.5	31.3	41.3
K4	ϕ16	ϕ32	ϕ38	ϕ48
K5	15	20	27	35
K6	18	24	32	40

PRECISION PLANETARY GEARBOX

PLF

- Quiet operation
  Helical gears are used to achieve smooth and quiet operation.
- High precision
  The backlash is less than 3 arcmin and the positioning is accurate.
- High rigidity & torqueThe use of integral ball bearings greatly improves the rigidity and torque.
- Methods of flange and connector
  It can be installed on any motor in the world.
- No grease leakage
  The use of grease with high viscosity which is not easy to separate effectively prevents the grease leakage.
- Convenient maintenance
  No need to replace the grease in the product life period , and the installation is more convenient.

Model Selection of Speed Reducers

PLF Type

PLF080 – 10 – S1 – P1 / Motor

Reducer Model

PLF040, PLF060, PLF080
PLF120, PLF160

Output Shaft Keyway

S1:(Solid Output Shaft No Keyway)
S2Standard (Keyway)
S3: Output for holes

Motor Model

Motor Manufacturer & Model

Ratio

1-stage: 3,4,5,6,7,8,9,10
2-stage: 12,15,16,20,25,28,30,35,40,50,70,80,100
3-stage: 60,64,72,80,90,100,120,144,150,160,180,200,
240,258,288,320,384,512,600,800,1000

Backlash Grade

P0: High precision backlash
P1: Precision backlash
P2: Standard backlash

Model Example: PLF080-100-S2-P1/Panasonic MSMJ 082S1A

PLF Reducer Specifications

Specs	Unit	Stage	Ratio	PLF040	PLF060	PLF080	PLF120	PLF160
Rated Output Torque / T_{2N}	Nm	1	3	17	28	112	165	423
			4	15	38	110	146	364
			5	14	40	108	160	423
			7	13	35	105	149	358
			10	12	25	100	141	293
		2	15	17	28	112	165	423
			20	15	38	110	146	364
			25	14	40	108	160	423
			30	13	28	112	165	423
			35	13	35	105	149	358
			40	12	38	110	146	364
			50	14	40	108	160	423
			70	13	35	105	149	358
			100	12	25	100	141	293
Max.Output Torque / T_{2NOT}[1]/	Nm	1,2	3~100	3Times of Nominal Output Torque				
Rated Input Speed / n_{1N}	rpm	1,2	3~100	3000	3000	3000	3000	2500
Max.Input Speed / n_{1B}	rpm	1,2	3~100	5000	5000	5000	5000	3600
Precision Backlash P1	arcmin	1	3~10	≤3	≤3	≤3	≤3	≤3
		2	12~100	≤5	≤5	≤5	≤5	≤5
Standard Backlash P2	arcmin	1	3~10	≤5	≤5	≤5	≤5	≤5
		2	12~100	≤8	≤8	≤8	≤8	≤8
Torsional Rigidity	Nm/arcmin	1,2	3~100	3	6	12	22	50
Max.Radial Force / F_{2rB}[2]	N	1,2	3~100	320	460	1300	3200	6520
Max.Axial Force / F_{2a1B}[2]	N	1,2	3~100	160	230	660	1600	3260
Service Life	hr	1,2	3~100	20000 h				
Efficiency / η	%	1	3~10	≥97%				
		2	15~100	≥94%				
Weight	kg	1	3~10	0.73	0.99	2.1	4.98	18.2
		2	15~100	1.05	1.46	3.2	6.92	24.9
Operating Temperature	℃	1,2	3~100	-25℃~+90℃				
Lubrication		1,2	3~100	Synthetic Grease				
Protection Class		1,2	3~100	IP65				
Mounting Position		1,2	3~100	Any				
Noise Level(n1=3000rpm, No load)	dB(A)	1,2	3~100	≤62	≤63	≤65	≤67	≤68

Reducer Rotary Inertia

Specs	Unit	Stage	Ratio	PLF040	PLF060	PLF080	PLF120	PLF160
Moment of Inertia	$kg.cm^2$	1	3	0.16	0.63	3.48	12.84	36.72
			4	0.16	0.6	3.31	12.22	34.63
			5	0.16	0.59	3.28	12.1	34.24
			7	0.16	0.59	3.27	12.05	34.07
			10	0.16	0.59	3.26	12.03	34.02
		2	12–40	0.16	0.59	3.26	12.03	34.02
			50–100	0.16	0.59	3.26	12.03	34.02

1. Ratio (i=Nin/Nout)
2. Output revolutions 100rpm, acting on the output shaft center position.
3. *Continuous operation, service life is 10000hrs.

MODEL: PLF

1–Stage

Ratio: 3, 4 , 5, 7, 10,

Dimensions:

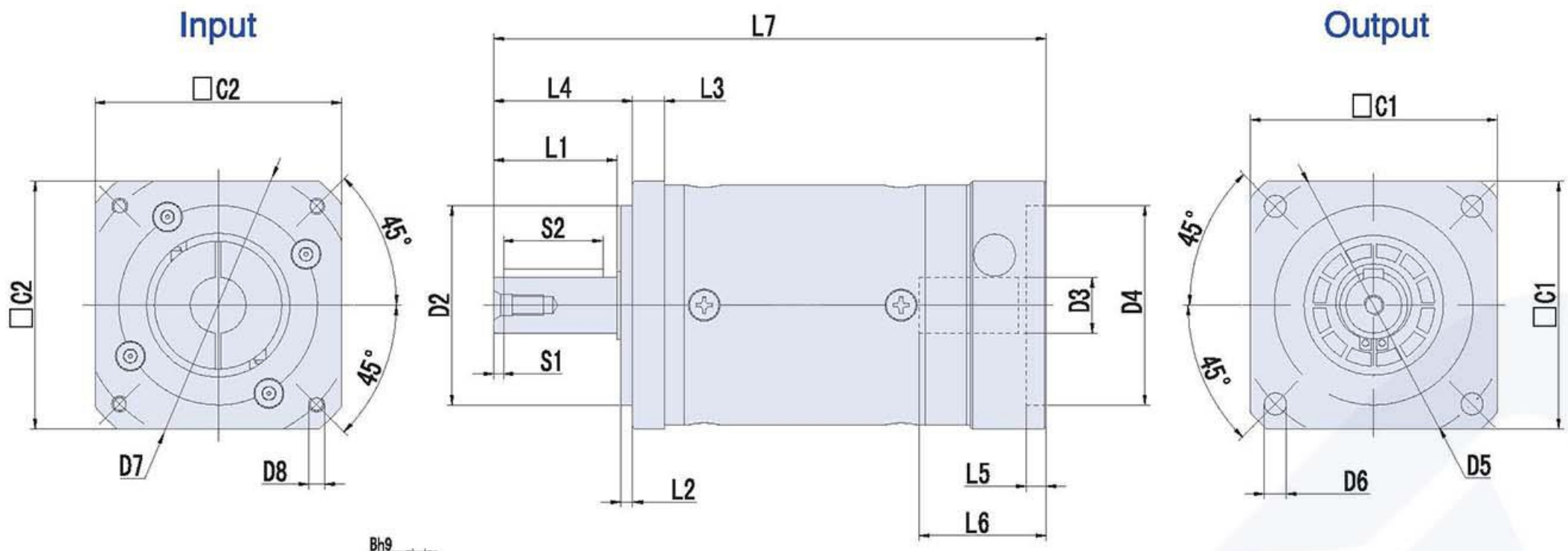

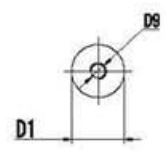

Output shaft type S1

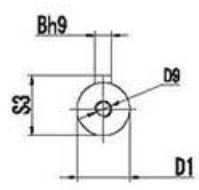

Output shaft type S2

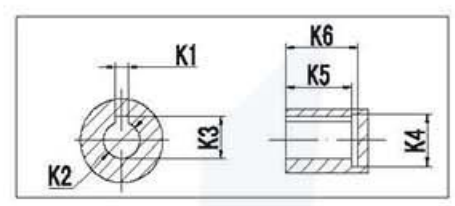

Output hole type S3

Unit:mm

Size	PLF040–L1	PLF060–L1	PLF080–L1	PLF120–L1	PLF160–L1
D1	ϕ12(13)	ϕ14(16)	ϕ20(22)	ϕ25(32)	ϕ40
D2	ϕ26	ϕ50	ϕ80	ϕ110	ϕ130
D3	ϕ8(≤11)	ϕ14(≤19)	ϕ19(≤24)	ϕ24(≤32)	ϕ35(42)
D4	ϕ30(30–50)	ϕ50(50–70)	ϕ70(50–110)	ϕ110(70–130)	ϕ114.3(110–150)
D5	(ϕ48)	(ϕ70)	(ϕ100)	(ϕ130)	ϕ185(165)
D6	4–ϕ3.4	4–ϕ5	4–ϕ6.5	4–ϕ9	4–ϕ11
D7	ϕ46(45–70)	ϕ70(70–130)	ϕ90(70–145)	ϕ145(90–165)	ϕ200(145–220)
D8	(4–M4X8L)	(4–M4X10L)	(4–M5X12L)	(4–M8X25L)	(4–M12X25L)
D9	M4X0.7P	M5X0.8P	M6X1.0P	M10X1.5P	M16X2.0P
L1	18	31	36	50	80
L2	3	3	3	4	5
L3	4	8	10	15	16
L4	22.5	35	40	55	87
L5	(5)	(5)	(5)	(8)	(7)
L6	(32)	(37)	(42)	(59)	(86)
L7	(88)	(117)	(157)	(211)	(292)
C1	□45	□62	□90	□124	□175
C2	(□50)	(□62)	(□92)	(□120)	(□176)
S1	2	2.5	4	5	8
S2	14	25	28	40	65
S3	13.5	16	22.6	28	43
B	4	5	5	8	12
K1	3	3	6	8	10
K2	ϕ8	ϕ8	ϕ18	ϕ25	ϕ35
K3	9.2	9.2	21	28	38.3
K4	ϕ11	ϕ11	ϕ24	ϕ32	ϕ42
K5	20	20	30	40	52
K6	24	24	35	48	58

Note 1: Inside of () is the optional range of sizes, outside of () is the standard sizes.

Note 2: The reducer output shaft size and length can be customized for customers.

Note 3: The input size can be changed according to the servomotor or stepper motor of each brand.

MODEL: PLF

2–Stage

Ratio: 15, 20, 25, 30, 35, 40, 50, 70, 100

Dimensions:

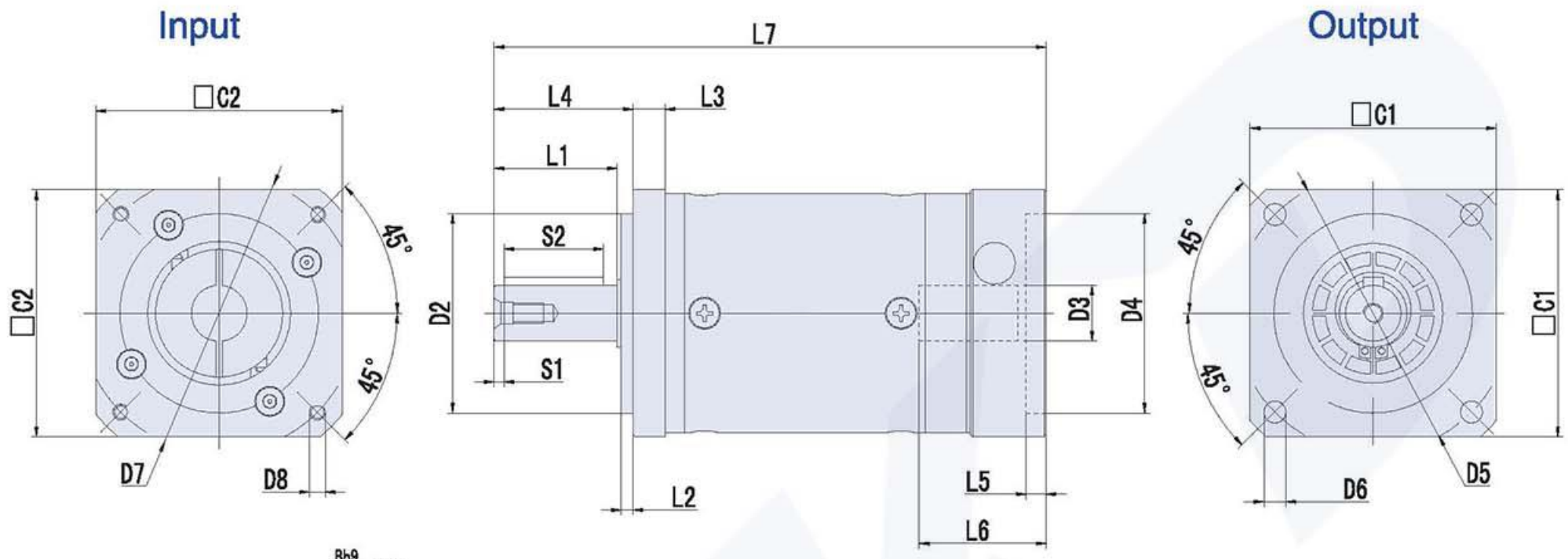

Output shaft type S1 Output shaft type S2 Output hole type S3

Unit:mm

Size / Code	PLF040–L2	PLF060–L2	PLF080–L2	PLF120–L2	PLF160–L2
D1	ϕ12(13)	ϕ14(16)	ϕ20(22)	ϕ25(32)	ϕ40
D2	ϕ26	ϕ50	ϕ80	ϕ110	ϕ130
D3	ϕ8(≤11)	ϕ14(≤19)	ϕ19(≤24)	ϕ24(≤32)	ϕ35(42)
D4	ϕ30(30–50)	ϕ50(50–70)	ϕ70(50–110)	ϕ110(70–130)	ϕ114.3(110–150)
D5	ϕ48	(ϕ70)	(ϕ100)	(ϕ130)	ϕ185(165)
D6	4–ϕ3.4	4–ϕ5	4–ϕ6.5	4–ϕ9	4–ϕ11
D7	ϕ46(45–70)	ϕ70(70–130)	ϕ90(70–145)	ϕ145(90–165)	ϕ200(145–220)
D8	(4–M4X8L)	(4–M4X10L)	(4–M5X12L)	(4–M8X25L)	(4–M12X25L)
D9	M4X0.7P	M5X0.8P	M6X1.0P	M10X1.5P	M16X2.0P
L1	18	31	36	50	80
L2	3	3	3	4	5
L3	4	8	10	15	16
L4	22.5	35	40	55	87
L5	(5)	(5)	(5)	(8)	(7)
L6	(32)	(37)	(42)	(59)	(86)
L7	(105)	(138)	(160)	(224)	(295)
C1	□45	□62	□90	□124	□175
C2	(□50)	(□62)	(□92)	(□120)	(□176)
S1	2	2.5	4	5	8
S2	14	25	28	40	65
S3	13.5	16	22.6	28	43
B	4	5	5	8	12
K1	3	3	6	8	10
K2	ϕ8	ϕ8	ϕ18	ϕ25	ϕ35
K3	9.2	9.2	21	28	38.3
K4	ϕ11	ϕ11	ϕ24	ϕ32	ϕ42
K5	20	20	30	40	52
K6	24	24	35	48	58

Note 1: Inside of () is the optional range of sizes, outside of () is the standard sizes.

Note 2: The reducer output shaft size and length can be customized for customers.

Note 3: The input size can be changed according to the servomotor or stepper motor of each brand.

SERVOBOX Planetary Reducers

MODEL： PLE

雙段 2-Stage

速比 Ratio：15，20，25，30，35，40，50， 70，100

外形尺寸圖 Dimensions：

輸出端 Output

輸入端 Input

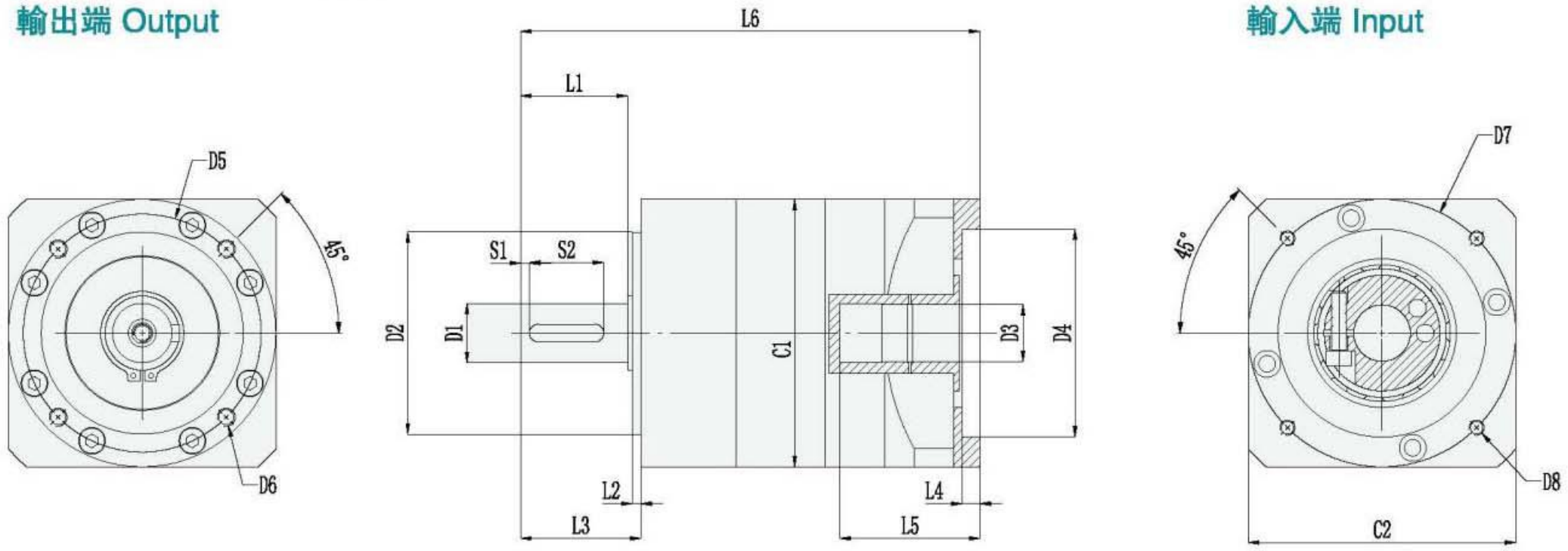

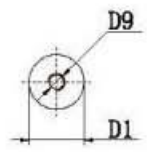

出力軸形式 N
Output shaft type N

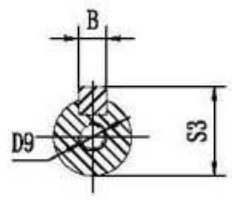

出力軸形式 S2
Output shaft type S2

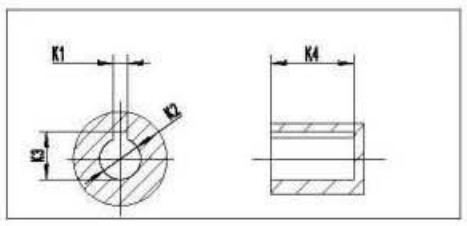

輸出孔形式 H
Output hole type H

Unit:mm

	型號 Model / 代碼Code	PLE040-L2	PLE060-L2	PLE080-L2	PLE120-L2	PLE160-L2
A	D1	ϕ10	ϕ14	ϕ20	ϕ25	ϕ40
	D2	ϕ26	ϕ40	ϕ68	ϕ80	ϕ130
	D3	ϕ8（≤11）	ϕ14（≤19）	ϕ19（≤24）	ϕ22（≤32）	ϕ35（≤42）
	D4	ϕ30（30-50）	ϕ50（50-70）	ϕ70（50-110）	ϕ110（70-130）	ϕ114.3（110-150）
	D5	ϕ34	ϕ52	ϕ80	ϕ100	ϕ145
	D6	(4-M4*8L)	(4-M5*15L)	(4-M6*20L)	(4-M10*18L)	(4-M12*24L)
	D7	ϕ46（45-70）	ϕ70（70-130）	ϕ90（70-145）	ϕ145（90-165）	ϕ200（145-220）
	D8	（4-M4*12L)	（4-M5*10L)	（4-M6*15L)	（4-M8*16L)	（4-M12*20L)
	D9	M3*10L	M5*16L	M6*18L	M10*25L	M16*36L
B	L1	23	30	36	50	80
	L2	2	3	3	4	5
	L3	26	35	40.5	55.5	87
	L4	(3.5)	(4)	(6)	(10)	(10)
	L5	(27)	(31)	(47)	(57.5)	(81)
	L6	(103)	(132.5)	(177)	(234.5)	(317)
	C1	ϕ42	ϕ60	ϕ90	ϕ120	ϕ165
	C2	（ ¨ 42)	（ ¨ 60）	（ ¨ 90)	（ ¨ 130)	（ ¨ 176)
C	S1	2	3	3	5	5
	S2	16	20	25	40	65
	S3	11.2	16	22.5	28	43
	B	3	5	6	8	12
	K1	3	3	5	6	10
	K2	ϕ8	ϕ10	ϕ15	ϕ20	ϕ35
	K3	9.2	11.4	17.3	22.8	38.3
	K4	24	20	30	38	58

PLE Series

標準型行星減速機

Standard Planetary Gearbox

機種型號表示
Indication of Model Numbers

PLE080	–	10	–	S2	–	P1		MOTO
減速機型式 Reducer model		減速比 Ratio		出力軸鍵槽 Output Bearing		背隙等級 Backlash Class		馬達型號 Motor Type
PLE040 PLE060 PLE080 PLE120 PLE160		單段 1–Stage 3, 4 , 5, 7, 10 雙段 2–Stage 15, 20, 25, 30, 35 40, 50, 70, 100 叁段 3–Stage 60 ~1000		S2: 標準品，帶鍵槽 Standard (Keyway) N: 實心軸，無鍵槽 Solid Output Shaft(No Keyway) H: 輸出爲孔 Output for holes		P0: 高精密背隙 High precision backlash P1: 精密背隙 Precision backlash P2: 標準背隙 Standard backlash		馬達制造商及型號 Motor Brand & Model No. （如下圖）

減速器匹配电机需要确认下列尺寸：
The gearbox matching motor needs to be confirmed with following dimensions :

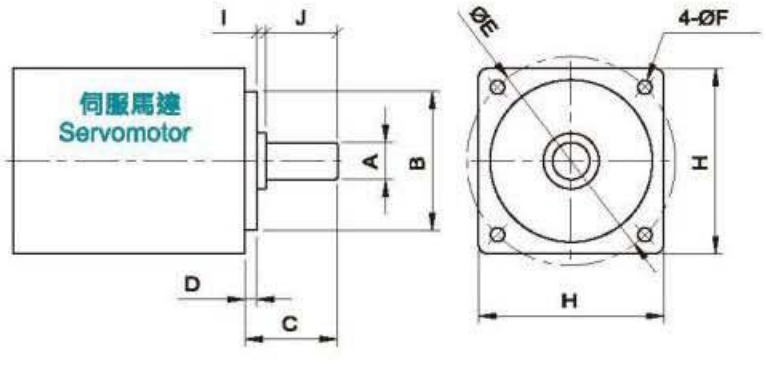

A	B	C	D	E	F	H	I	J

行星速機訂購編號

減速機型 Type	型號 Model	速比 Ratio	出力軸鍵槽 Output Shaft Keyway	背隙等級 Backlash Class	馬達型號 MOTOR NO.

PLE 減速機性能資料 Reducer Specifications

規格 Specs	單位 Unit	節數 Stage	減速比 Ratio	PLE040	PLE060	PLE080	PLE120	PLE160
額定輸出力矩T_{2N} Rated Output Torque	Nm	1	3	17	28	112	165	423
			4	15	38	110	146	364
			5	14	40	108	160	423
			7	13	35	105	149	358
			10	12	25	100	141	293
		2	15	17	28	112	165	423
			20	15	38	110	146	364
			25	14	40	108	160	423
			30	13	28	112	165	423
			35	13	35	105	149	358
			40	12	38	110	146	364
			50	14	40	108	160	423
			70	13	35	105	149	358
			100	12	25	100	141	293
最大輸出扭矩 T_{2NOT}[1]/ Max.Output Torque	Nm	1,2	3~100	3倍額定輸出力矩/3Times of Nominal Output Torque				
額定輸入轉速n_{1N}/Rated Input Speed	rpm	1,2	3~100	3000	3000	3000	3000	2500
最大輸入轉速n_{1B}/Max.Input Speed	rpm	1,2	3~100	5000	5000	5000	5000	3600
精密背隙P1 / Precision Backlash P1	arcmin	1	3~10	≤6	≤6	≤6	≤6	≤6
		2	12~100	≤8	≤8	≤8	≤8	≤8
標準背隙P2 / Standard Backlash P2	arcmin	1	3~10	≤8	≤8	≤8	≤8	≤8
		2	12~100	≤10	≤10	≤10	≤10	≤10
扭轉剛性/Torsional Rigidity	Nm/arcmin	1,2	3~100	3	6	12	22	50
容許徑向力F_{2rB}[2] / Max.Radial Force	N	1,2	3~100	320	460	1300	3200	6520
容許軸向力F_{2a1B}[2] / Max.Axial Force	N	1,2	3~100	160	230	660	1600	3260
使用壽命 / Service Life	hr	1,2	3~100	20000 h				
效率 η/Efficiency	%	1	3~10	≥97%				
		2	15~100	≥94%				
重量/Weight	kg	1	3~10	0.73	0.99	2.1	4.98	18.2
		2	15~100	1.05	1.46	3.2	6.92	24.9
使用溫度 / Operating Temperature	℃	1,2	3~100	-25℃~+90℃				
潤滑/Lubrication		1,2	3~100	全合成潤滑油脂Synthetic Grease				
防護等級 / Protection Class		1,2	3~100	IP65				
安裝方向 / Mounting Position		1,2	3~100	任意方向 Any Direction				
噪音值(n1=3000rpm，無負載)/ Noise Level	dB(A)	1,2	3~100	≤62	≤63	≤65	≤67	≤68

減速機轉動慣量 Reducer Rotary Inertia

規格 Specs	單位 Unit	節數 Stage	減速比 Ratio	PLE040	PLE060	PLE080	PLE120	PLE160
轉動慣量J1 Moment of Inertia	$kg.cm^2$		3	0.16	0.63	3.48	12.84	36.72
			4	0.16	0.6	3.31	12.22	34.63
			5	0.16	0.59	3.28	12.1	34.24
			7	0.16	0.59	3.27	12.05	34.07
			10	0.16	0.59	3.26	12.03	34.02
		2	12–40	0.16	0.59	3.26	12.03	34.02
			50–100	0.16	0.59	3.26	12.03	34.02

1. 減速比(i=Nin/Nout)　2. 輸出轉數100rpm時，作用于輸出軸中心位置。　3. *連續運轉，使用壽命爲10000hrs。

1. Ratio (i=Nin/Nout)　2. Output revolutions 100rpm, acting on the output shaft center position.
3. *Continuous operation, service life is 10000hrs.

SERVOBOX Planetary Reducers

MODEL： PLE

單段 1-Stage

速比 Ratio：3，4，5，7，10

外形尺寸圖 Dimensions：

輸出端 Output

輸入端 Input

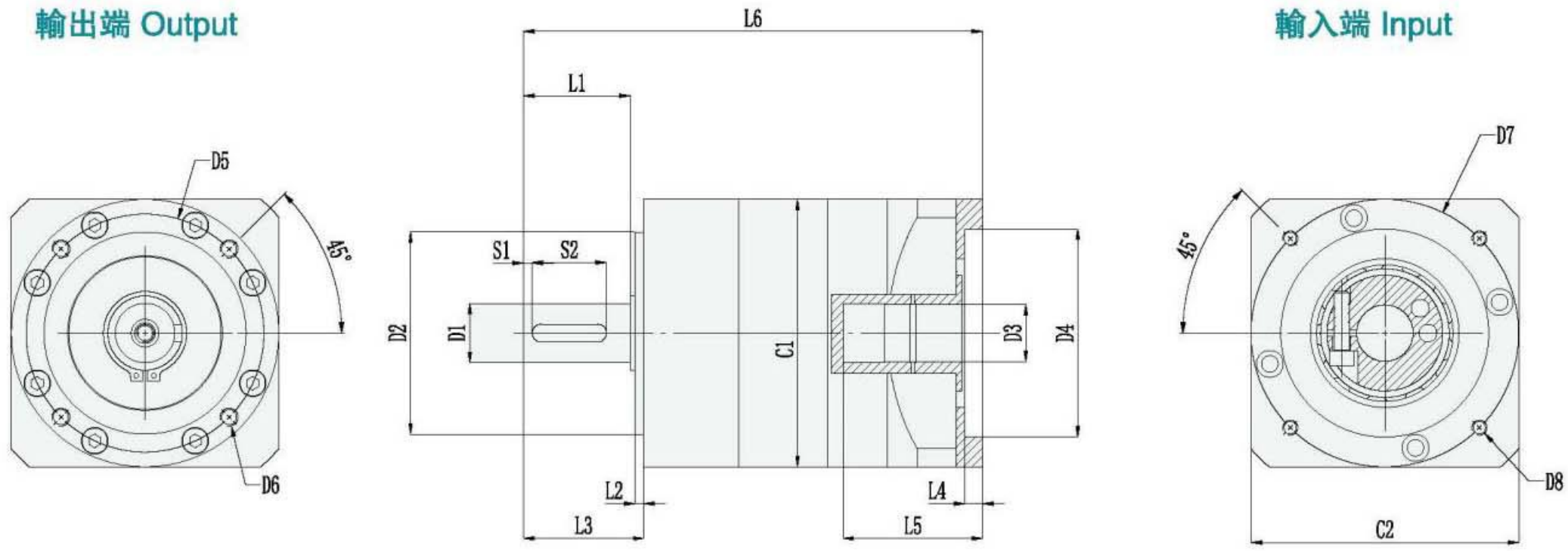

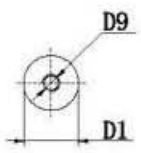

出力軸形式 N
Output shaft type N

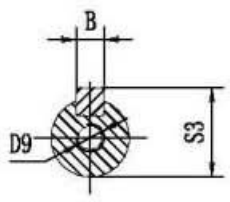

出力軸形式 S2
Output shaft type S2

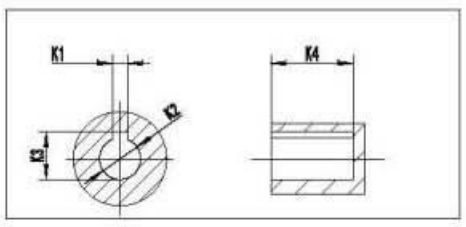

輸出孔形式 H
Output hole type H

Unit:mm

	型號 Model / 代碼 Code	PLE040-L1	PLE060-L1	PLE080-L1	PLE120-L1	PLE160-L1
A	D1	ϕ10	ϕ14	ϕ20	ϕ25	ϕ40
	D2	ϕ26	ϕ40	ϕ68	ϕ80	ϕ130
	D3	ϕ8（≤11）	ϕ14（≤19）	ϕ19（≤24）	ϕ22（≤32）	ϕ35（≤42）
	D4	ϕ30（30-50）	ϕ50（50-70）	ϕ70（50-110）	ϕ110（70-130）	ϕ114.3（110-150）
	D5	ϕ34	ϕ52	ϕ80	ϕ100	ϕ145
	D6	(4-M4*8L)	(4-M5*15L)	(4-M6*20L)	(4-M10*18L)	(4-M12*24L)
	D7	ϕ46（45-70）	ϕ70（70-130）	ϕ90（70-145）	ϕ145（90-165）	ϕ200（145-220）
	D8	（4-M4*12L)	（4-M5*10L)	（4-M6*15L)	（4-M8*16L)	（4-M12*20L)
	D9	M3*10L	M5*16L	M6*18L	M10*25L	M16*36L
B	L1	23	30	36	50	80
	L2	2	3	3	4	5
	L3	26	35	40.5	55.5	87
	L4	(3.5)	(4)	(6)	(10)	(10)
	L5	(27)	(31)	(47)	(57.5)	(81)
	L6	(88)	(115)	(154.5)	(205)	(276)
	C1	ϕ42	ϕ60	ϕ90	ϕ120	ϕ165
	C2	（□42)	（□60）	（□90)	（□130)	（□176)
C	S1	2	3	3	5	5
	S2	16	20	25	40	65
	S3	11.2	16	22.5	28	43
	B	3	5	6	8	12
	K1	3	3	5	6	10
	K2	ϕ8	ϕ10	ϕ15	ϕ20	ϕ35
	K3	9.2	11.4	17.3	22.8	38.3
	K4	24	20	30	38	58

PRECISION PLANETARY GEARBOX

VRS

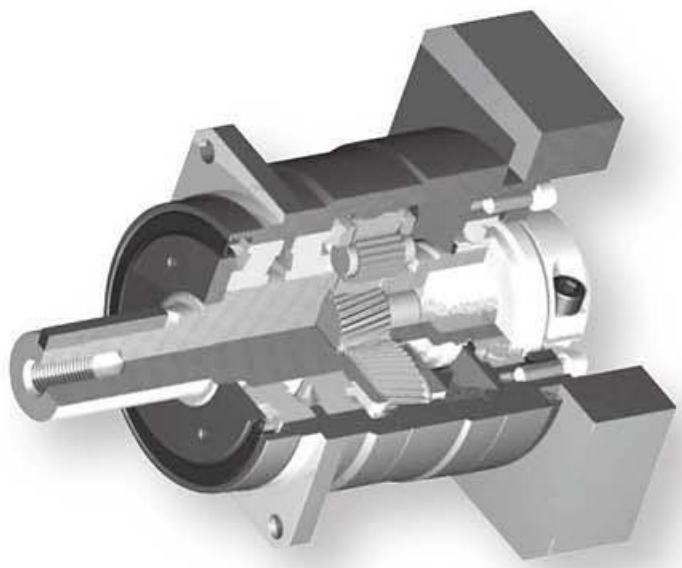

- High precision
  The backlash is less than 3 arcmin and the positioning is accurate.
- High rigidity & torque
  The use of integral ball bearings greatly improves the rigidity and torque.
- High load capacity
  The main output shaft adopts taper roller bearing to greater increase the radial and axial force.
- Methods of flange and connector
  It can be installed on any motor in the world.
- No grease leakage
  The use of grease with high viscosity which is not easy to separate effectively prevents the grease leakage.
- Convenient maintenance
  No need to replace the grease in the product life period , and the installation is more convenient.

Model Selection of Speed Reducers

VRS Type

VRS060 – 10 – S1 – P1 / 馬達

Reducer Model

VRS060, VRS075, VRS100, VRS140, VRS180, VRS210, VRS240

Output Shaft Keyway

S1:(Solid Output Shaft No Keyway)
S2: Standard (Keyway)
S3: Output for holes

Motor Model

Motor Manufacturer & Model

Ratio

1-stage: 3, 4, 5, 6, 7, 8, 9, 10
2-stage: 15, 16, 20, 25, 28, 30, 35, 40, 50, 70, 100

Backlash Grade

P0: High precision backlash
P1: Precision backlash
P2: Standard backlash

Model Example: VRS180-100-S2-P1/Panasonic MSMJ 082S1A

VRS Reducer Specifications

Specs	Unit	Stage	Ratio	VRS060	VRS075	VRS100	VRS140	VRS180	VRS210	VRS240
Rated Output Torque / T_{2N}	Nm	1	3	55	130	208	342	588	1140	1500
			4	50	140	290	542	1050	1700	2500
			5	60	160	330	650	1200	2000	2500
			6	55	150	310	600	1100	1900	2260
			7	50	140	300	550	1100	1800	2300
			8	45	120	260	500	1000	1600	2100
			9	40	100	230	450	900	1500	1800
			10	40	100	230	450	900	1500	1800
		2	15	55	130	208	342	588	1140	2300
			16	55	130	208	342	588	1140	2300
			20	50	140	290	542	1050	1700	2500
			25	60	160	330	650	1200	2000	2500
			28	60	160	330	650	1200	2000	2500
			30	55	150	310	600	1100	1900	2300
			35	50	140	300	550	1100	1800	2200
			40	45	120	260	500	1000	1600	2350
			50	60	160	330	650	1200	2000	2200
			70	50	140	300	550	1100	1800	2200
			100	40	100	230	450	900	1500	1800
Max.Output Torque / T_{2NOT}[1]	Nm	1,2	3~100	3Times of Nominal Output Torque						
Rated Input Speed / n_{1N}	rpm	1,2	3~100	5000	4000	4000	3000	3000	2000	1000
Max.Input Speed / n_{1B}	rpm	1,2	3~100	10000	8000	8000	6000	6000	4000	2500
Precision Backlash P1	arcmin	1	3~10	≤1	≤1	≤1	≤1	≤1	≤1	≤1
		2	12~100	≤3	≤3	≤3	≤3	≤3	≤3	≤3
Standard Backlash P2	arcmin	1	3~10	≤3	≤3	≤3	≤3	≤3	≤3	≤3
		2	15~100	≤5	≤5	≤5	≤5	≤5	≤5	≤5
Torsional Rigidity	Nm/arcmin	1,2	3~100	7	14	25	50	145	225	260
Max.Radial Force / F_{2rB}[2]	N	1,2	3~100	2750	4100	6400	9880	15000	20000	27500
Max.Axial Force / F_{2a1B}[2]	N	1,2	3~100	2350	3200	5360	9690	14200	28000	30000
Service Life	hr	1,2	3~100	20000h						
Efficiency / η	%	1	3~10	≥96%						
		2	15~100	≥93%						
Weight	kg	1	3~10	1.8	3.8	7.2	16.8	32	49	65
		2	15~100	2.1	4.1	8.1	17.5	35	53	70
Operating Temperature	℃	1,2	3~100	(-15℃ ~ +90℃)						
Lubrication		1,2	3~100	(Synthetic Grease)						
Protection Class		1,2	3~100	IP65						
Mounting Position		1,2	3~100	(Any Direction)						
Noise Level(n1=3000rpm, No load)	dB(A)	1,2	3~100	≤62	≤62	≤65	≤68	≤68	≤70	≤70

Reducer Rotary Inertia

Specs	Unit	Stage	Ratio	VRS060	VRS075	VRS100	VRS140	VRS180	VRS210	VRS240
Moment of Inertia	$kg.cm^2$	1	3	0.16	0.61	3.25	9.21	28.98	69.61	82.16
			4	0.14	0.48	2.74	7.54	23.67	54.37	75.58
			5	0.13	0.47	2.71	7.42	23.29	53.27	75.29
			6	0.13	0.45	2.65	7.25	22.75	51.72	72.35
			7	0.13	0.45	2.62	7.14	22.48	50.97	69.13
			8	0.13	0.44	2.58	7.07	22.59	50.84	69.22
			9	0.13	0.44	2.57	7.04	22.53	50.63	66.23
			10	0.13	0.44	2.57	7.03	22.51	50.56	66.23
		2	15–40	0.03	0.13	0.47	2.71	7.42	23.29	48.23
			50–100	0.03	0.13	0.44	2.57	7.03	22.51	45.58

1. Ratio (i=Nin/Nout)
2. When output speed is 100rpm, acting on the output shaft center position
3. *Continuous operation, service life is 10000hrs

MODEL: VRS

1–Stage

Ratio: 3, 4, 5, 6, 7, 8, 9, 10

Dimensions:

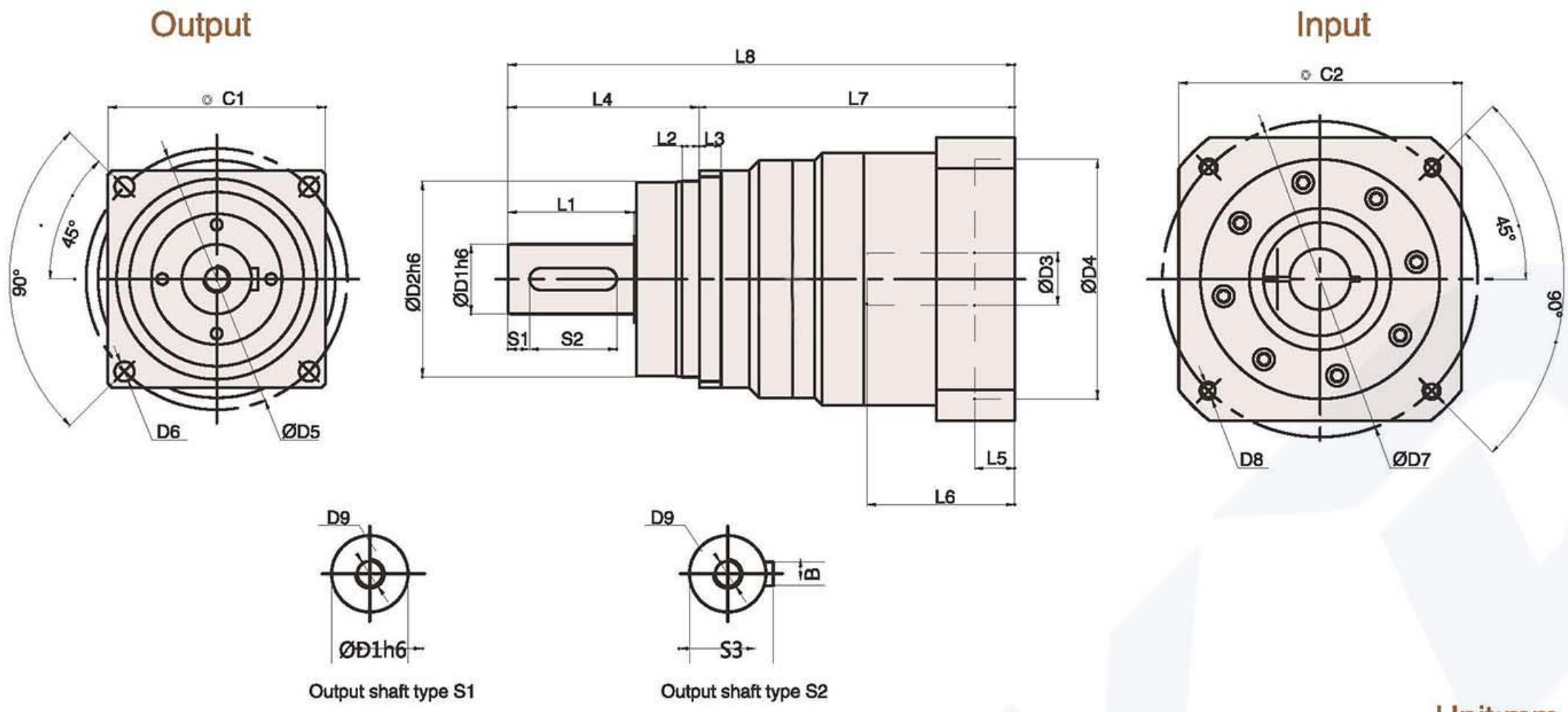

Unit:mm

Size	VRS060–L1	VRS075–L1	VRS100–L1	VRS140–L1	VRS180–L1	VRS210–L1	VRS240–L1
D1	16	22	32	40	55	75	85
D2	60	70	90	130	160	180	200
D3	8(8 ~ 19)	14(14 ~ 24)	19(19 ~ 35)	24(24 ~ 48)	38(38 ~ 48)	48(48 ~ 55)	60
D4	30(30 ~ 70)	50(50 ~ 110)	70(70 ~ 114.3)	110(110 ~ 114.3)	114.3(114.3 ~ 200)	200	220
D5	68	85	120	165	215	250	290
D6	4–Ø5.5	4–Ø6.6	4–Ø9	4–Ø11	4–Ø13.5	4–Ø17	4–Ø17
D7	46(45 ~ 90)	70(70 ~ 145)	90(90 ~ 200)	145(145 ~ 200)	200(200 ~ 235)	235	240
D8	M3 ~ M5	M4 ~ M8	M5 ~ M12	M8 ~ M12	M12	M12	M16
D9	M5	M8	M12	M16	M20	M20	M20
L1	28	36	58	82	82	105	130
L2	5	6	8	10	12	15	20
L3	6	7	10	12	15	17	20
L4	48	56	88	112	112	143	170
L5	7.5 ~ 9	10.5 ~ 16	12 ~ 36.5	8	10	10	12
L6	42 ~ 43.5	50.5 ~ 66	62 ~ 82	69 ~ 115	83 ~ 117	116	55
L7	94.5 ~ 96	117.5 ~ 133	139 ~ 153	170 ~ 216	210 ~ 244	257	295
L8	142.5 ~ 144	173.5 ~ 189	227 ~ 247	282 ~ 328	322 ~ 356	400	465
C1	60	75	100	140	182	215	240
C2	40(40 ~ 80)	60(60 ~ 130)	80(80 ~ 180)	130(130 ~ 180)	180(180 ~ 220)	220	250
S1	2	3	10	5	6	7	3
S2	22	28	40	70	70	90	105
S3	18	24.5	35	43	59	79.5	90
B	5	6	10	12	16	20	22

Note 1: Inside of () is the optional range of sizes, outside of () is the standard sizes.

Note 2: The reducer output shaft size and length can be customized for customers.

Note 3: The input size can be changed according to the servomotor or stepper motor of each brand.

MODEL: VRS

2–Stage

Ratio: 15, 16, 20, 25, 28, 30, 35, 40, 50, 70, 100

Dimensions:

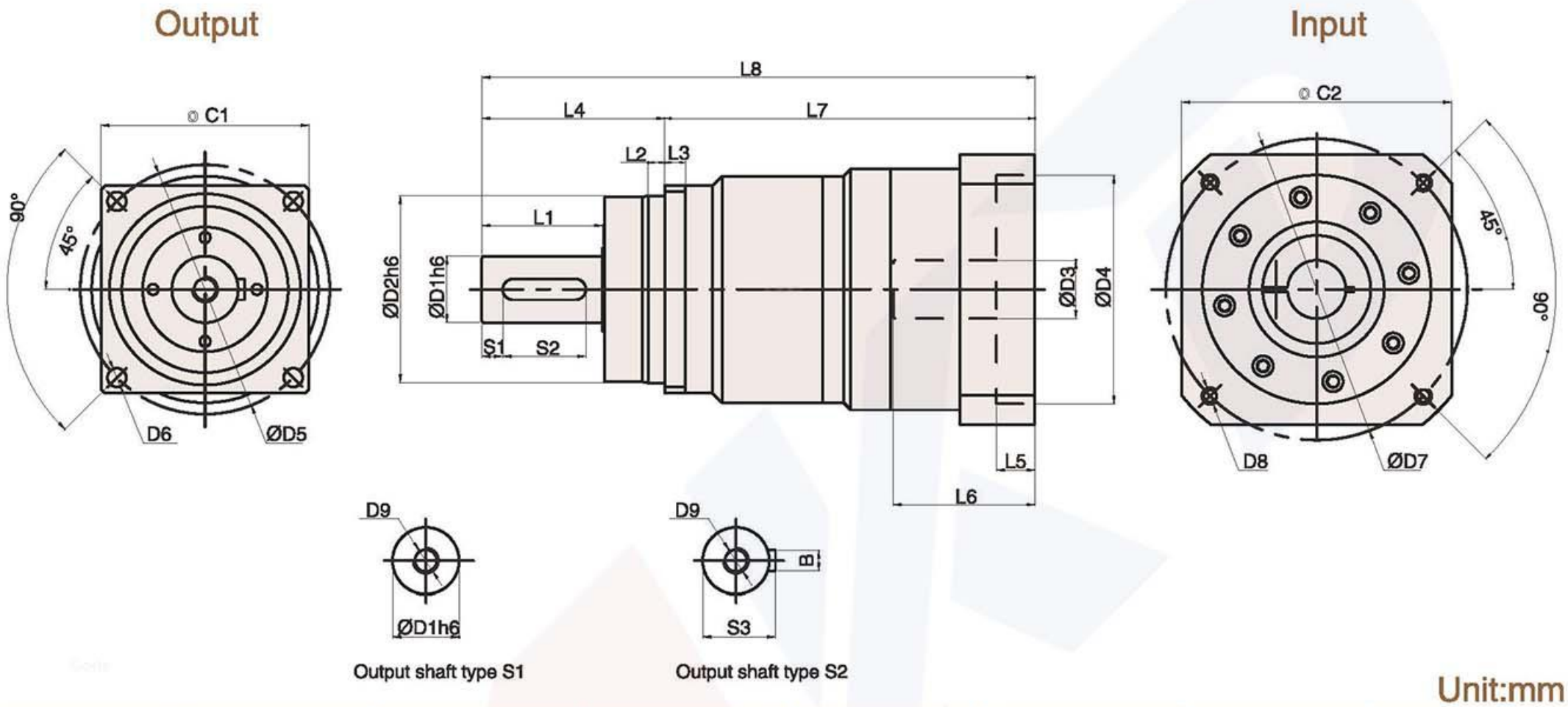

Output shaft type S1

Output shaft type S2

Unit:mm

Size	VRS060–L2	VRS075–L2	VRS100–L2	VRS140–L2	VRS180–L2	VRS210–L2	VRS240–L2
D1	16	22	32	40	55	75	85
D2	60	70	90	130	160	180	200
D3	8(8 ~ 14)	14(14 ~ 24)	19(19 ~ 28)	24(24 ~ 38)	38(24 ~ 42)	48(48 ~ 55)	48
D4	30(30 ~ 50)	50(50 ~ 110)	50(50 ~ 110)	110(110 ~ 114.3)	114.3(110 ~ 114.3)	200	220
D5	68	85	120	165	215	250	290
D6	4–Ø5.5	4–Ø6.6	4–Ø9	4–Ø11	4–Ø13.5	4–Ø17	4–Ø17
D7	46(45 ~ 70)	70(70 ~ 145)	70(70 ~ 145)	145(145 ~ 200)	200(145 ~ 200)	235	240
D8	M3 ~ M5	M4 ~ M8	M5 ~ M8	M8 ~ M12	M8 ~ M12	M12	M16
D9	M5	M8	M12	M16	M20	M20	M20
L1	28	36	58	82	82	105	130
L2	5	6	8	10	12	15	20
L3	6	7	10	12	15	17	20
L4	48	56	88	112	112	143	170
L5	8 ~ 9	10.5 ~ 16	12 ~ 18.5	6 ~ 8	6 ~ 10	10	12
L6	42.5 ~ 43.5	50.5 ~ 66	61 ~ 68	69 ~ 81	69 ~ 117	116	55
L7	116.5 ~ 117.5	143 ~ 158.5	172 ~ 178	210 ~ 222	236.5 ~ 293.5	257	346
L8	164.5 ~ 165.5	199 ~ 214.5	260 ~ 266	322 ~ 334	348.5 ~ 406.5	400	516
C1	60	75	100	140	182	215	240
C2	40(40 ~ 65)	60(60 ~ 130)	60(60 ~ 130)	130(130 ~ 180)	130(130 ~ 180)	220	250
S1	2	3	10	5	6	7	3
S2	22	28	40	70	70	90	105
S3	18	24.5	35	43	59	79.5	90
B	5	6	10	12	16	20	22

Note 1: Inside of () is the optional range of sizes, outside of () is the standard sizes.

Note 2: The reducer output shaft size and length can be customized for customers.

Note 3: The input size can be changed according to the servomotor or stepper motor of each brand.

VRSF Reducer Specifications

Specs	Unit	Stage	Ratio	VRSF060	VRSF080	VRSF100	VRSF125
Rated Output Torque / T_{2N}	Nm	1	3	54	112	165	286
			4	48	110	146	255
			5	45	108	160	264
			7	41	105	149	245
			10	40	100	141	234
		2	15	54	112	165	286
			20	48	110	146	255
			25	45	108	160	264
			30	41	112	165	286
			35	41	105	149	245
			40	39	110	146	255
			50	45	108	160	264
			70	41	105	149	245
			100	40	100	141	234
Max.Output Torque / T_{2NOT}[1]/	Nm	1,2	3~100	3Times of Nominal Output Torque			
Rated Input Speed / n_{1N}	rpm	1,2	3~100	3000	3000	3000	3000
Max.Input Speed / n_{1B}	rpm	1,2	3~100	5000	5000	5000	5000
Precision Backlash P1	arcmin	1	3~10	≤5	≤5	≤5	≤5
		2	12~100	≤7	≤7	≤7	≤7
Standard Backlash P2	arcmin	1	3~10	≤8	≤8	≤8	≤8
		2	12~100	≤10	≤10	≤10	≤10
Torsional Rigidity	Nm/arcmin	1,2	3~100	5	12	14	23
Max.Radial Force / F_{2rB}[2]	N	1,2	3~100	800	1200	3200	5220
Max.Axial Force / F_{2a1B}[2]	N	1,2	3~100	400	600	1600	2600
Service Life	hr	1,2	3~100	21000 h			
Efficiency / η	%	1	3~10	≥97%			
		2	15~100	≥94%			
Weight	kg	1	3~10	1.2	1.6	3.76	7.43
		2	15~100	2.1	2.8	5.92	10.3
Operating Temperature	℃	1,2	3~100	-25℃~+90℃			
Lubrication		1,2	3~100	Synthetic Grease			
Protection Class		1,2	3~100	IP65			
Mounting Position		1,2	3~100	Any Direction			
Noise Level(n1=3000rpm, No load)	dB(A)	1,2	3~100	≤60	≤62	≤65	≤67

Reducer Rotary Inertia

Specs	Unit	Stage	Ratio	VRSF060	VRSF080	VRSF100	VRSF125
Moment of Inertia	$kg.cm^2$	1	3	0.16	0.61	3.25	9.21
			4	0.14	0.48	2.74	7.54
			5	0.13	0.47	2.71	7.42
			6	0.13	0.45	2.65	7.25
			7	0.13	0.45	2.62	7.14
			8	0.13	0.44	2.58	7.07
			9	0.13	0.44	2.57	7.04
			10	0.13	0.44	2.57	7.03
		2	12–40	0.03	0.13	0.47	2.71
			50–100	0.03	0.13	0.44	2.57

1. Ratio (i=Nin/Nout)
2. The Max. acceleration torque T2B=60% of T2NOT
3. When output speed is 100rpm, inertia acts on the output shaft center position.continuous operation, service life is 15000hrs.

MODEL：VRSF

1–Stage

Ratio：3，4，5，7，10

Dimensions

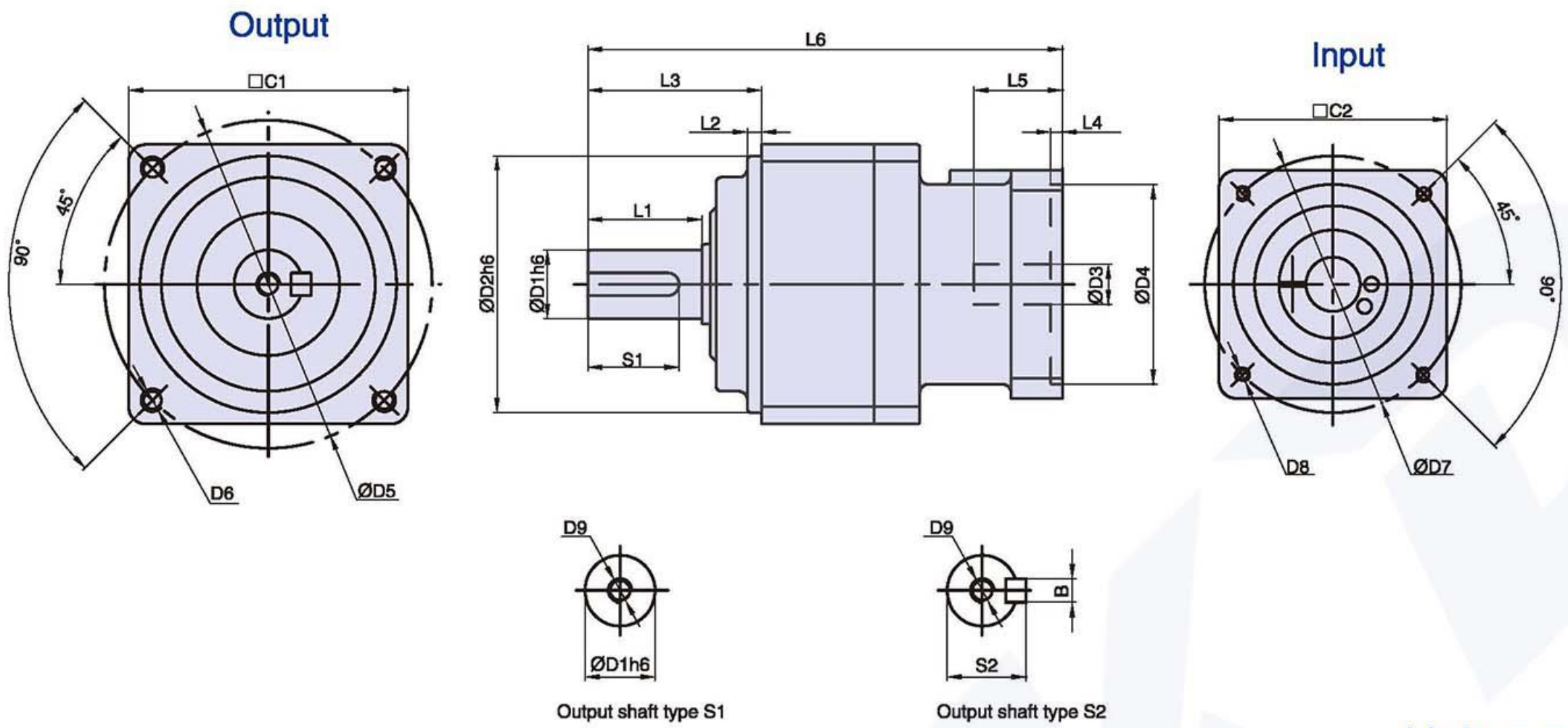

Unit:mm

Size	VRSF060–L1	VRSF080–L1	VRSF100–L1	VRSF125–L1
D1	12	19	24	32
D2	50	70	90	110
D3	8(8 ~ 14)	14(14 ~ 19)	19	22(22 ~ 24)
D4	30(30 ~ 50)	50(50 ~ 70)	70	110
D5	60	90	115	135
D6	M5	M6	M8	M10
D7	45(45 ~ 70)	70(70 ~ 90)	90	145
D8	M4 ~ M5	M4 ~ M5	M6	M8
D9	M4	M6	M8	M12
L1	20	30	40	55
L2	3	3	5	5
L3	32	50	61	75
L4	4	4	4	8
L5	27 ~ 32	32	38	65.5
L6	109	143.5 ~ 148.5	177	215.5
C1	52	78	98	125
C2	40(40 ~ 52)	60(60 ~ 80)	90	125(125 ~ 130)
S1	18	22	32	52
S2	13.5	21.5	27	35
B	4	6	6	10

Note 1：Inside of () is the optional range of sizes, outside of () is the standard sizes.

Note 2: The reducer output shaft size and length can be customized for customers.

Note 3: The input size can be changed according to the servomotor or stepper motor of each brand.

MODEL： VRSF

2–Stage

Ratio： 15, 20, 25, 30, 35, 40, 50, 70, 100

Dimensions：

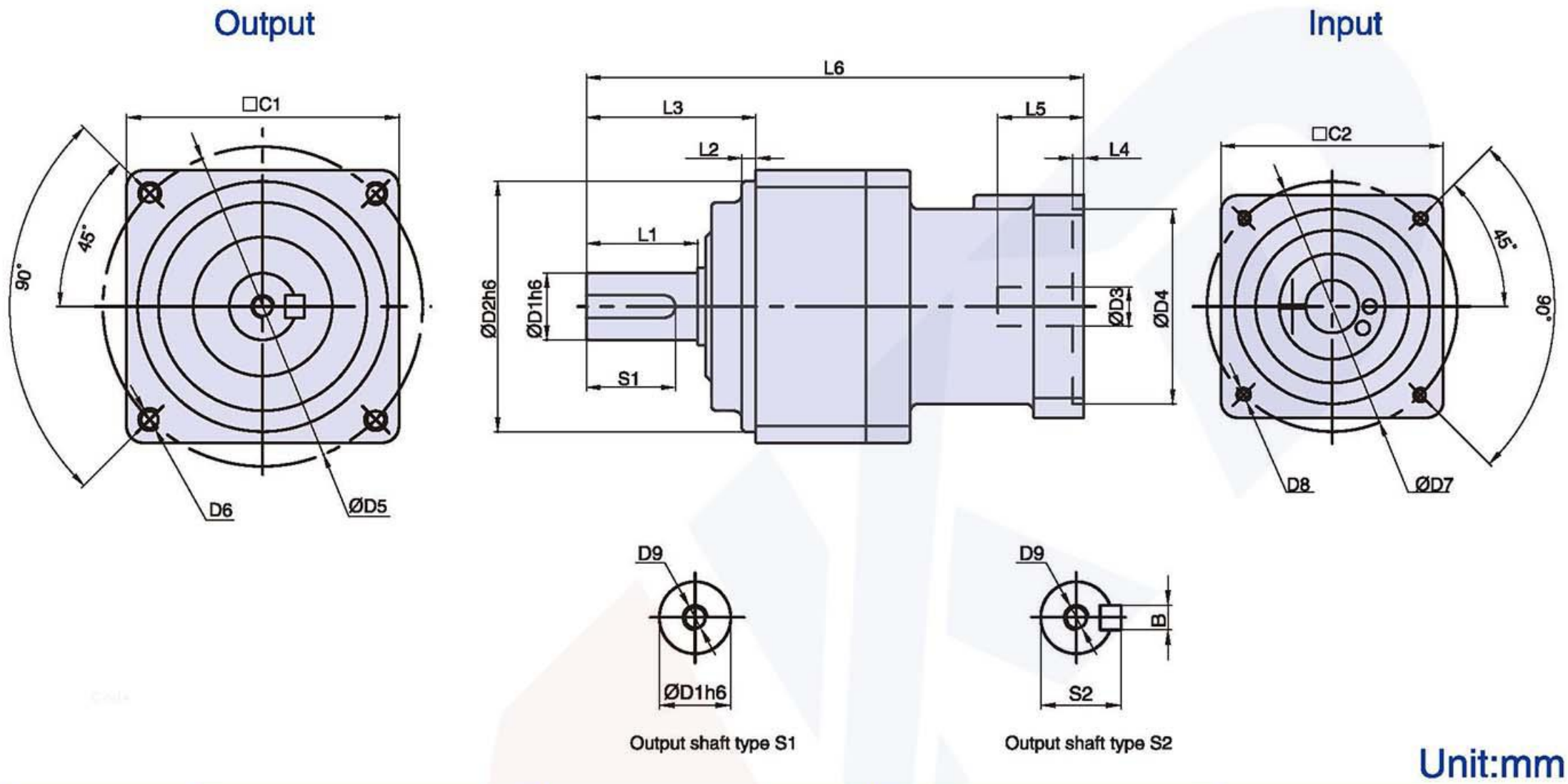

Unit:mm

Size	VRSF060–L2	VRSF080–L2	VRSF100–L2	VRSF125–L2
D1	12	19	24	32
D2	50	70	90	110
D3	11(11 ~ 14)	14(14 ~ 19)	14 ~ 19	22(22 ~ 24)
D4	50	50(50 ~ 70)	50(50 ~ 70)	110
D5	60	90	115	135
D6	M5	M6	M8	M10
D7	45(45 ~ 70)	70(70 ~ 90)	70 ~ 90	145
D8	M4 ~ M5	M4 ~ M5	M4 ~ M5	M8
D9	M4	M6	M8	M12
L1	20	30	40	55
L2	3	3	5	5
L3	32	50	61	75
L4	4	4	4	8
L5	32	32	38	65.5
L6	109	150 ~ 155	165 ~ 179	250.5
C1	52	78	98	125
C2	52	60(60 ~ 80)	60(60 ~ 80)	125(125 ~ 130)
S1	18	22	32	52
S2	13.5	21.5	27	35
B	4	6	8	10

Note 1： Inside of () is the optional range of sizes, outside of () is the standard sizes.
Note 2: The reducer output shaft size and length can be customized for customers.
Note 3: The input size can be changed according to the servomotor or stepper motor of each brand.

PRECISION PLANETARY GEARBOX

VRSF

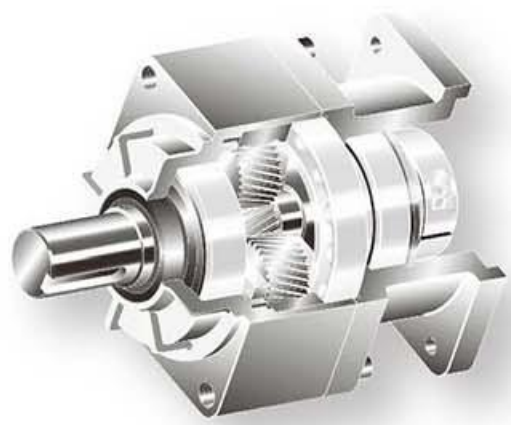

- Quiet operation
  Helical gears are used to achieve smooth and quiet operation.
- High precision
  The backlash is less than 3 arcmin and the positioning is accurate.
- High rigidity & torqueThe use of integral ball bearings greatly improves the rigidity and torque.
- Methods of flange and connector
  It can be installed on any motor in the world.
- No grease leakage
  The use of grease with high viscosity which is not easy to separate effectively prevents the grease leakage.
- Convenient maintenance
  No need to replace the grease in the product life period , and the installation is more convenient.

Model Selection of Speed Reducers

VRSF Type

VRSF 080 – 10 – S1 – P1 / Motor

Reducer Model

VRSF060, VRSF080
VRSF100, VRSF125

Output Shaft Keyway

S1:(Solid Output Shaft No Keyway)
S2: Standard (Keyway)
S3: Output for holes

Motor Model

Motor Manufacturer & Model

Ratio

1–stage: 3, 4 , 5, 7, 10
2–stage: 15, 20, 25, 30, 35, 40, 50, 70, 100

Backlash Grade

P0: High precision backlash
P1: Precision backlash
P2: Standard backlash

Model Example: VRSF080–100–S2–P1/Panasonic MSMJ 082S1A

HOLLOW ROTARY ACTUATOR

DG

Hollow rotary transmission
device with large diameter
Simple wiring and piping

Direct connection
Simple design to improve trust

High positioning precision
The accuracy of repeated positioning
is + 15sec Lost motion is 2mins
Angle transmission error is 4mins

Easy of origin regression
regression thanks to the using
the origin sensor kit
(Choose and purchase accessories)

Short time positioning
The positioning of the inertial load
can be realized in a short time

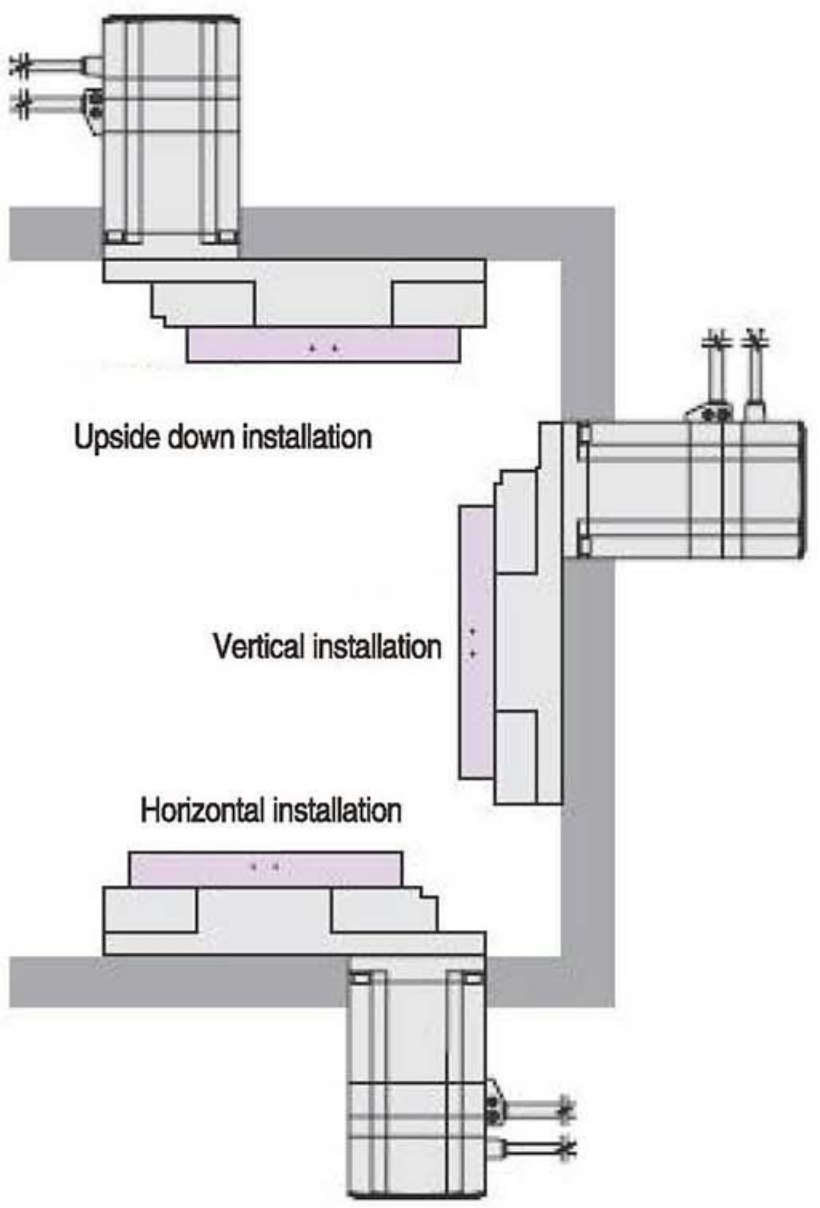

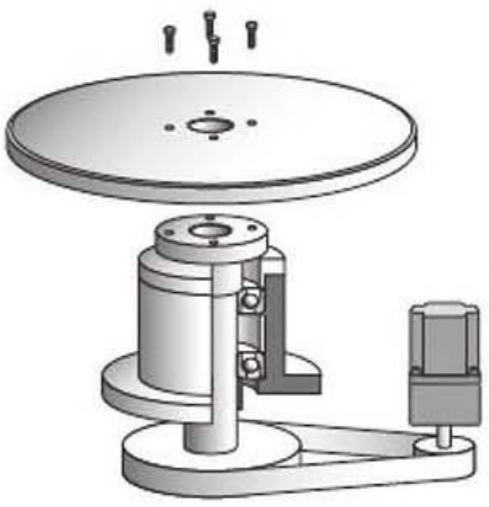

Motor + mechanism components
(separate design * procurement)

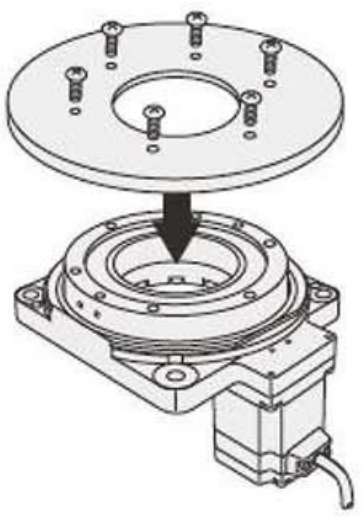

DGII series
(Integrated product)

Hollow rotary transmission device

● Direct connection→Simple design to improve trust

The hollow output platform can directly install the worktable and machine arm of the equipment. When the general equipment is positioned and run through the belt pulley and other parts, the precision of the transmission efficiency of the mechanism is reduced, or the necessity of maintaining the parts of the mechanism.
The DG series can be directly installed because it does not pass through the intermediate parts, except that the accuracy of the product itself, it can also realize free–maintenance.

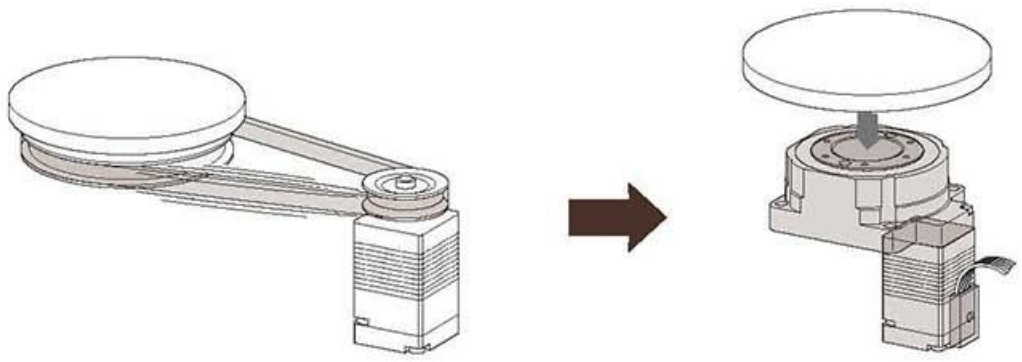

● Hollow rotary platform with large diameter→ simple wiring and piping

The design of a large diameter hollow hole (penetration) is realized by using one stage reduction gear mechanism to increase the diameter of the driven gear. It is suitable for the complicated wiring and piping application and so on, which makes the equipment design more succinct.

	Size(mm)	Hollow diameter
DG60	60	28
DG85R	85	33
DG130R	130	62

Eg: The application of DG130R.

● Simple origin regression→ save time and labor for design and parts procurement.

In order to simplify the operation of the origin regression, the company also prepares the original sensor kit for customers(Choose and purchase accessories).
The kit includes all the parts required to mark the original point. It can save the users' time and labor of installing the sensor for the design, production, and part purchase.

(DG130R sensor, example of shading plate installation)

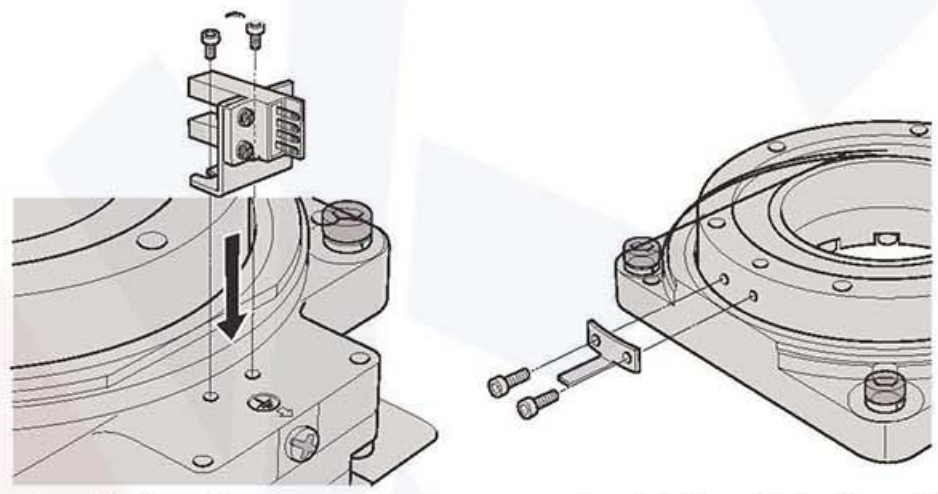

Installation of sensor　　Installation of shading plate

● High Positioning accuracy → repeated positioning accuracy is + 15sec Lost Motion is 2mins

The mechanism part have no backlash, because the gearbox adopts micro precision gear, and it can eliminate the backlash through its own adjusting mechanism. The repeated positioning accuracy of single direction is 15sec; while the lost motion is 2mins of two direction positioning, so it can achieve high precision positioning.

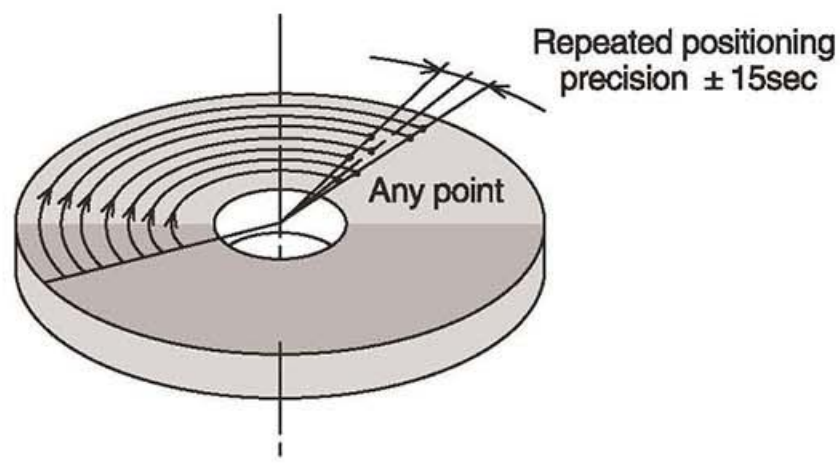

Structure drawing

● Standard type

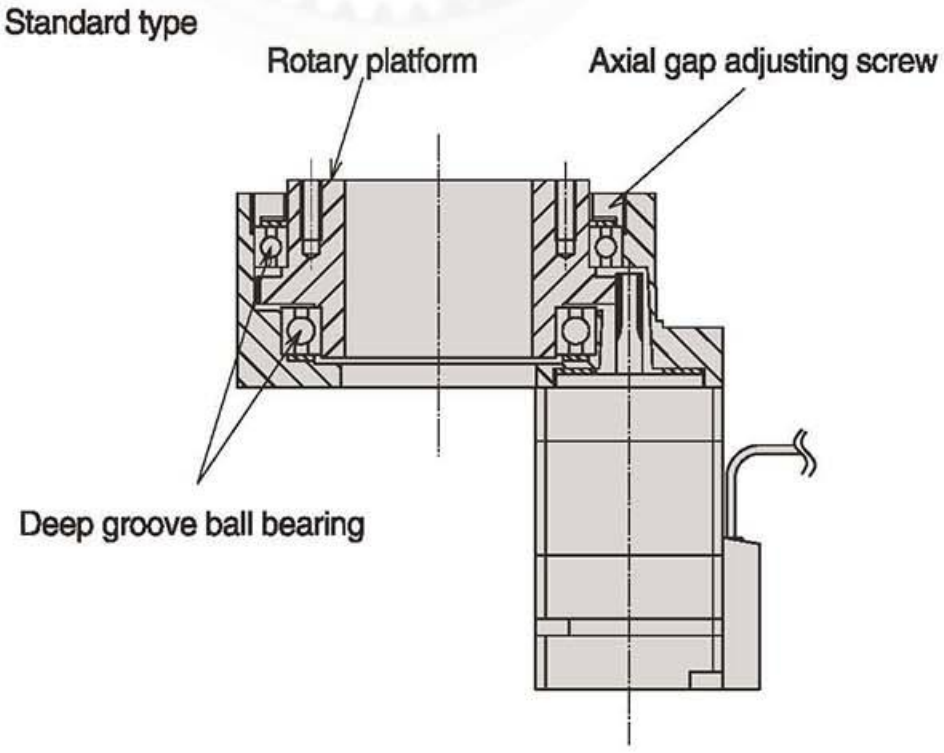

● High rigidity type (DG85R、DG130R)

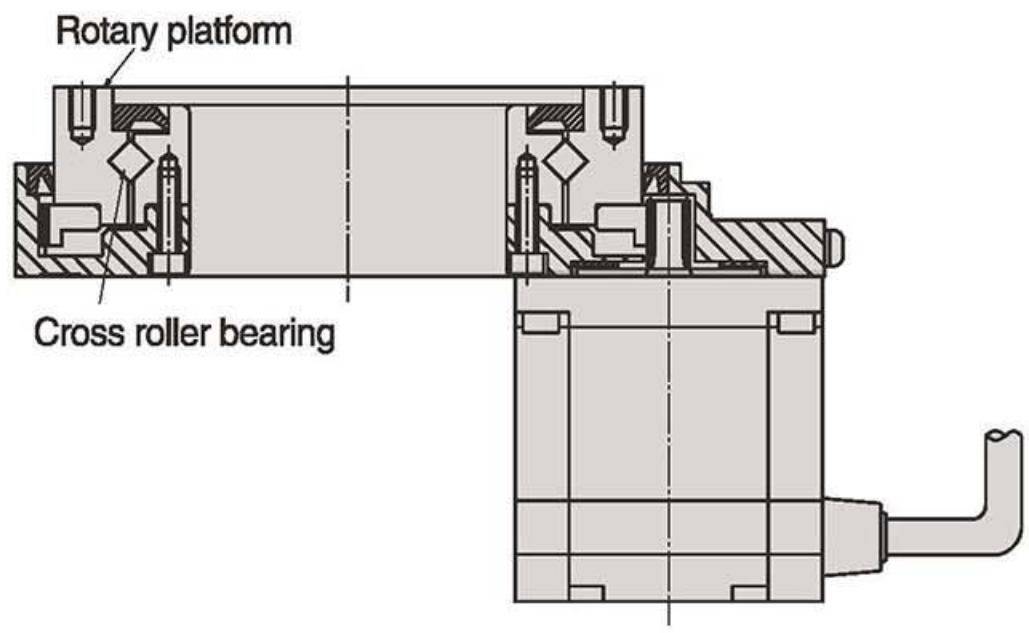

Technical parameter

Specs	Unit	DG–62	DG–85	DG–130	DG–200
Servo Motor	W	100W	200–400W	200–400W	750–1KW
Permissible torque	Nm	3.5	20	20	65
Moment of inertia	kgm^2	2480×10^{-6}	2498×10^{-6}	9472×10^{-6}	93581×10^{-6}
Allowable speed	rpm	200	200	200	200
Ratio		1/5	1/5	1/10	1/10
Positioning accuracy	sec	≤15	≤15	≤15	≤15
Repeated positioning accuracy	sec	±10	±5	±5	±5
Permissible thrust load	kgf	20	200	250	500
Permissible inertia load	Nm	10	60	60	200
Parallelism of rotating platform	μm	±5	±2	±2	±2
Concentricity of rotating platform	mm	±0.01	±0.01	±0.01	±0.01
Weight	kg	2.2	3	5.5	14

DG–62

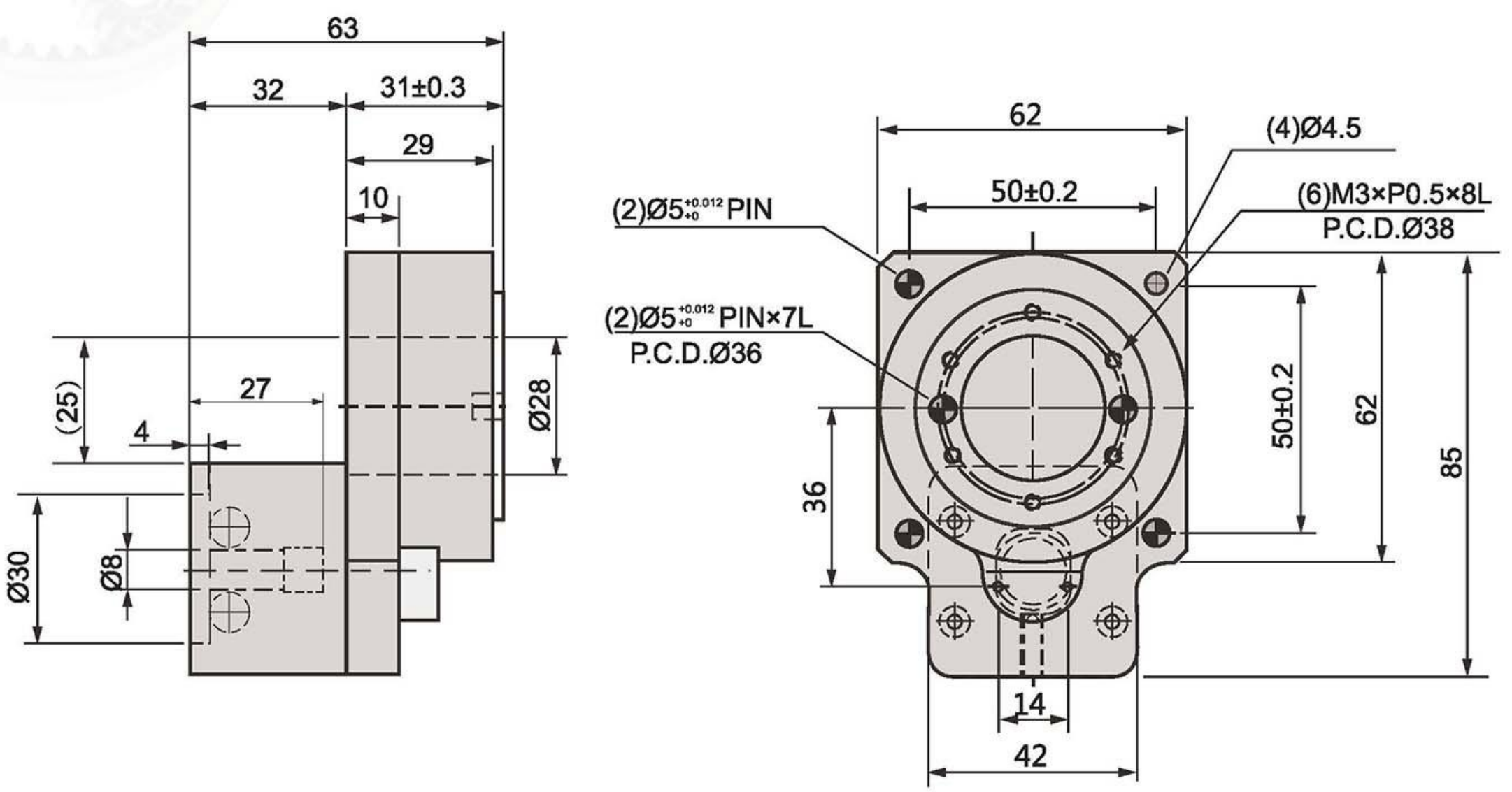

DG–85

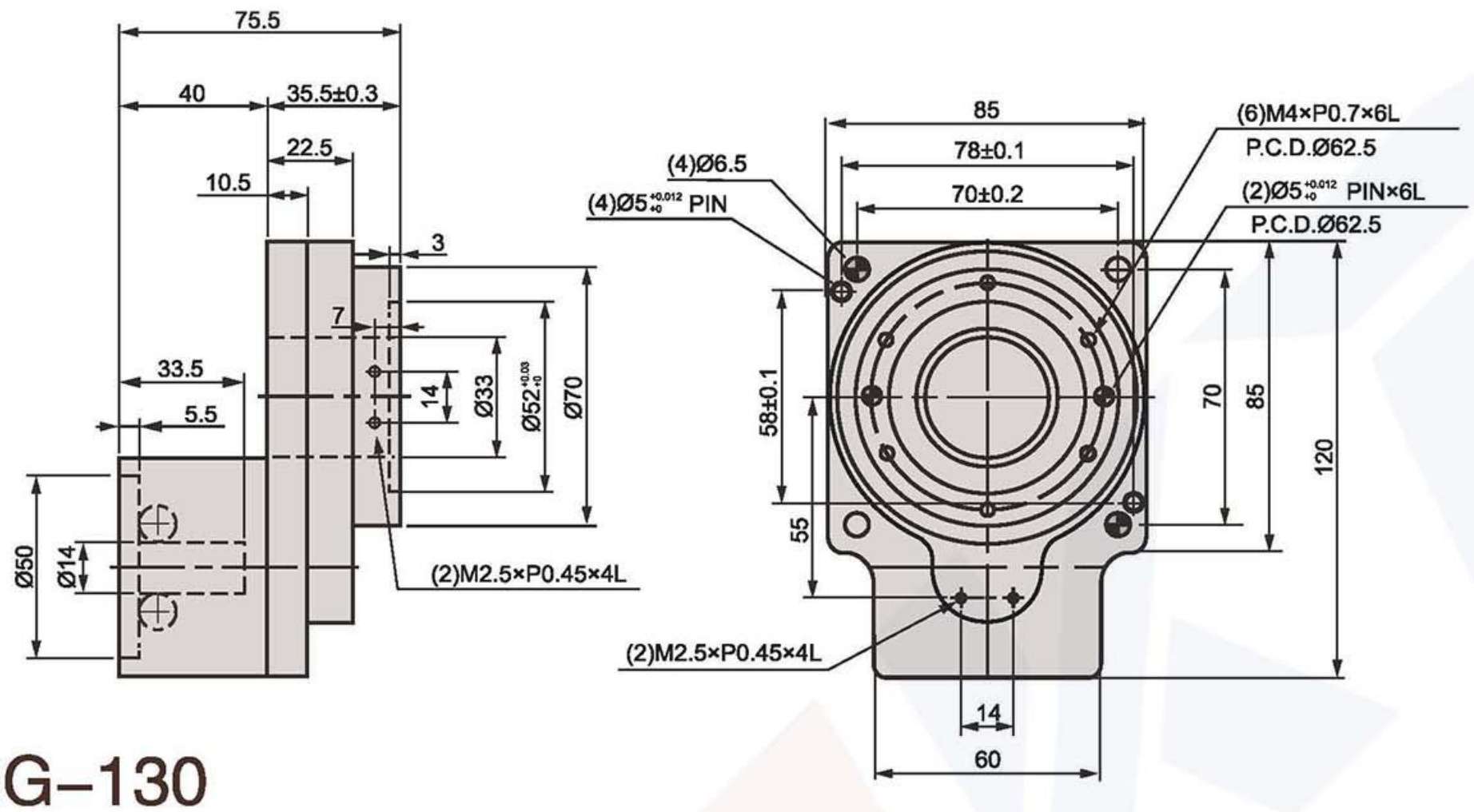

DG–130

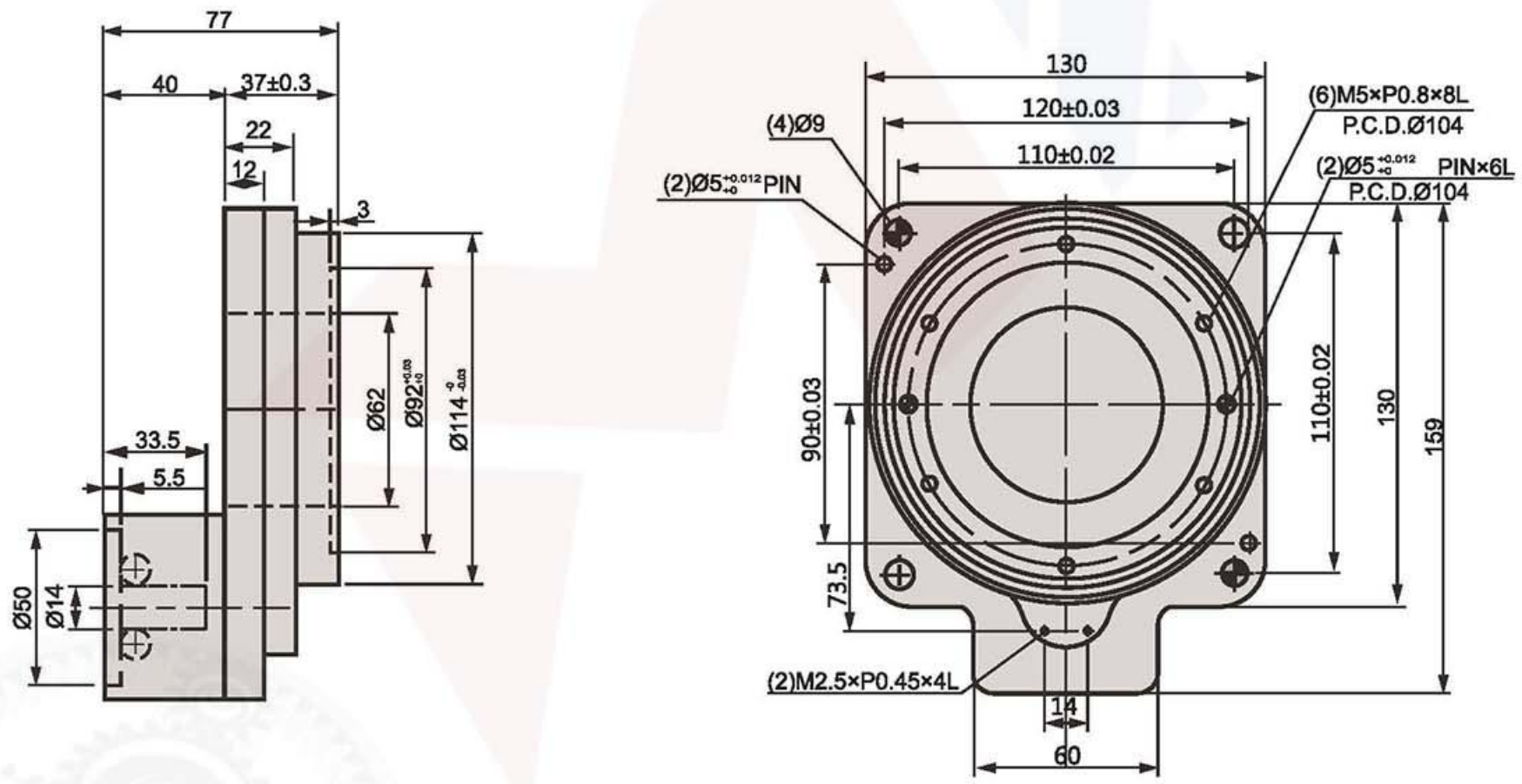

DG–200

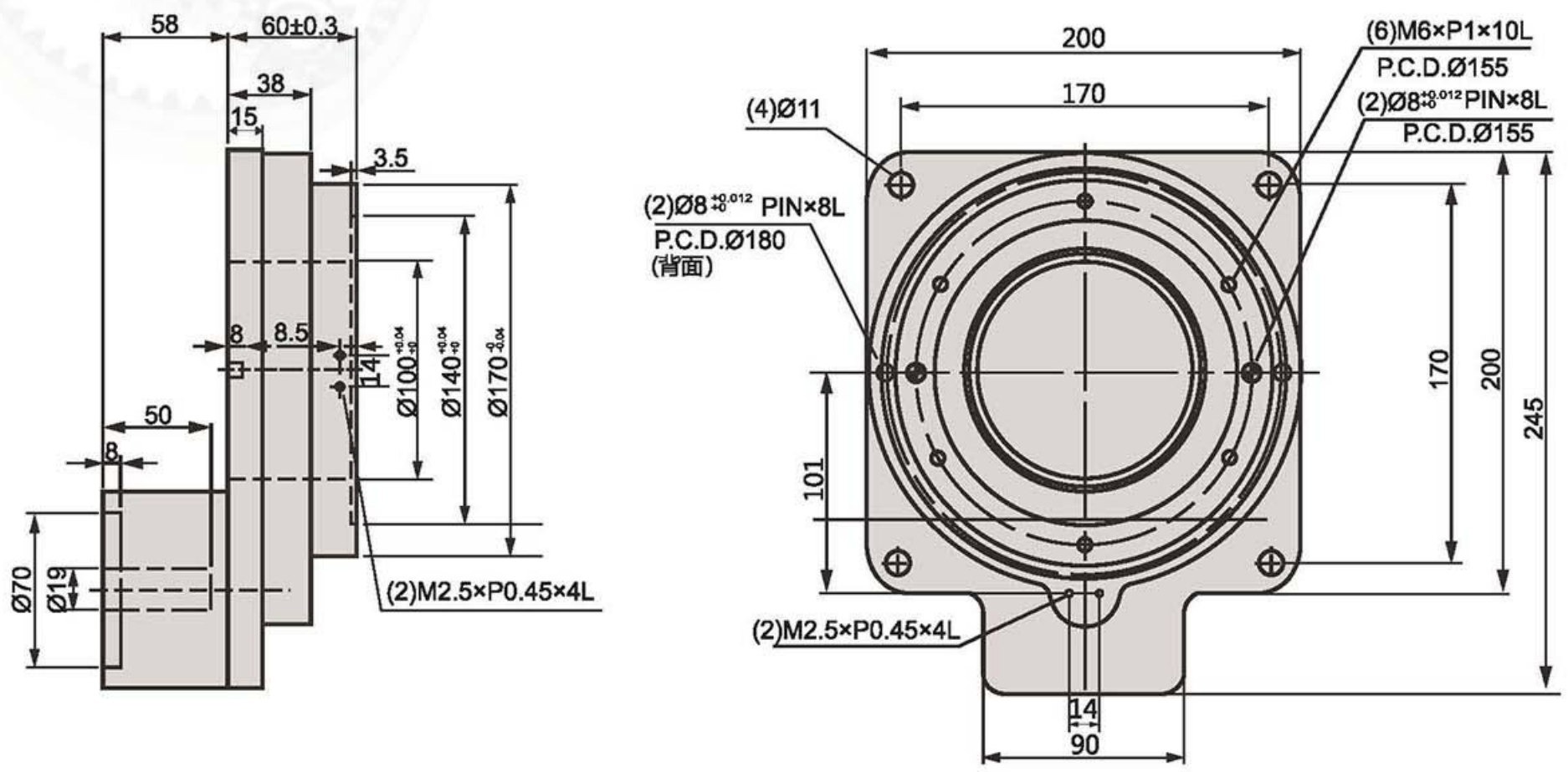

RIGHT ANGLE GEARBOX

ZR

ZR
Solid shaft

ZR–K
Hollow shaft

ZR–S
Doubl e output shaft

Low rotating backlash less than 10 seconds

- The right angle reducer is processed using a high precision six axial machine. It is clamped and and finished all in one process.
- Transmission gears can achieve low rotating backlash and high accuracy through precision grinding.
- Precision transmission and quiet, stable operation can realize low noise, high rigidity and other requirements.

Features

- The reducer body with a compact structure and small volume to save the mounting space.
- Although the reducer is small in volume and light in weight, and it features of high torque output and low backlash.
- When ordering, please inform the sizes of motor flange and shaft.

Model Identification

ZR — 42 — 3 — V2

Right Angle Reducer | Specifications | Ratio | Motor

V1: Servo Ø8 PCD45,M3 V2: Servo Ø8 PCD46,M4	T1: Stepper Ø5 PCD43.8,M3 T2: Stepper Ø6 PCD43.8,M3
100W AC servo motor for each brand	42 stepper motor for each brand

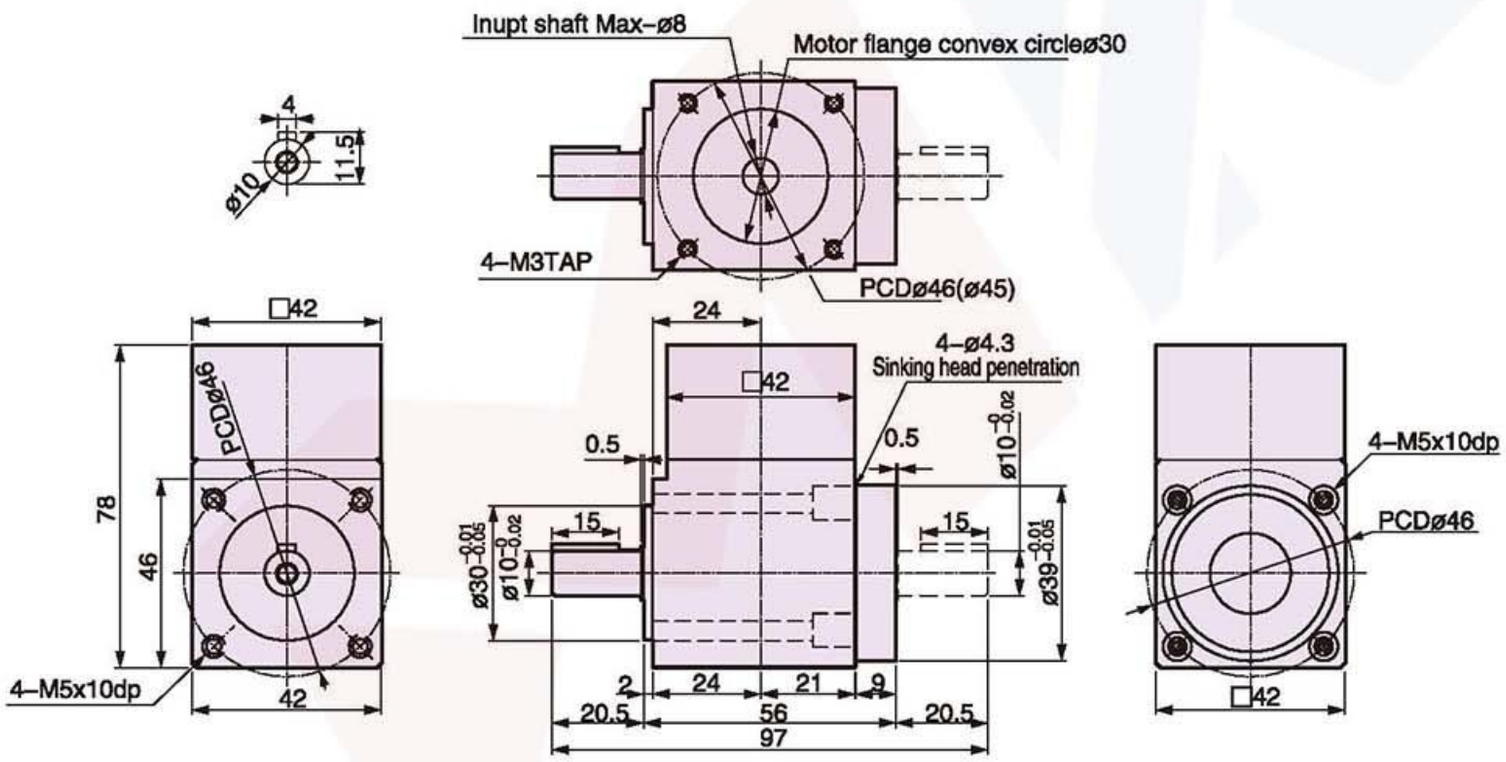

Model No. / Description	ZR42
Allowable Max. Torque (kgf.m/N.m)	1.5/15
Damage Torque value (kgf.m/N.m)	4/40
Allowable Motor Speed (rpm/min)	2500
Backlash(min-arc)	0.5
Weight(kg)	0.5

ZR — 42S — 9 — V2

Right Angle Reducer | Specifications | Ratio | Motor

9
12
15
21
30

V1: Servo Ø8 PCD45,M3 V2: Servo Ø8 PCD46,M4	T1: Stepper Ø5 PCD43.8,M3 T1: Stepper Ø6 PCD43.8,M3
100W AC servo motor for each brand	42 stepper motor for each brand

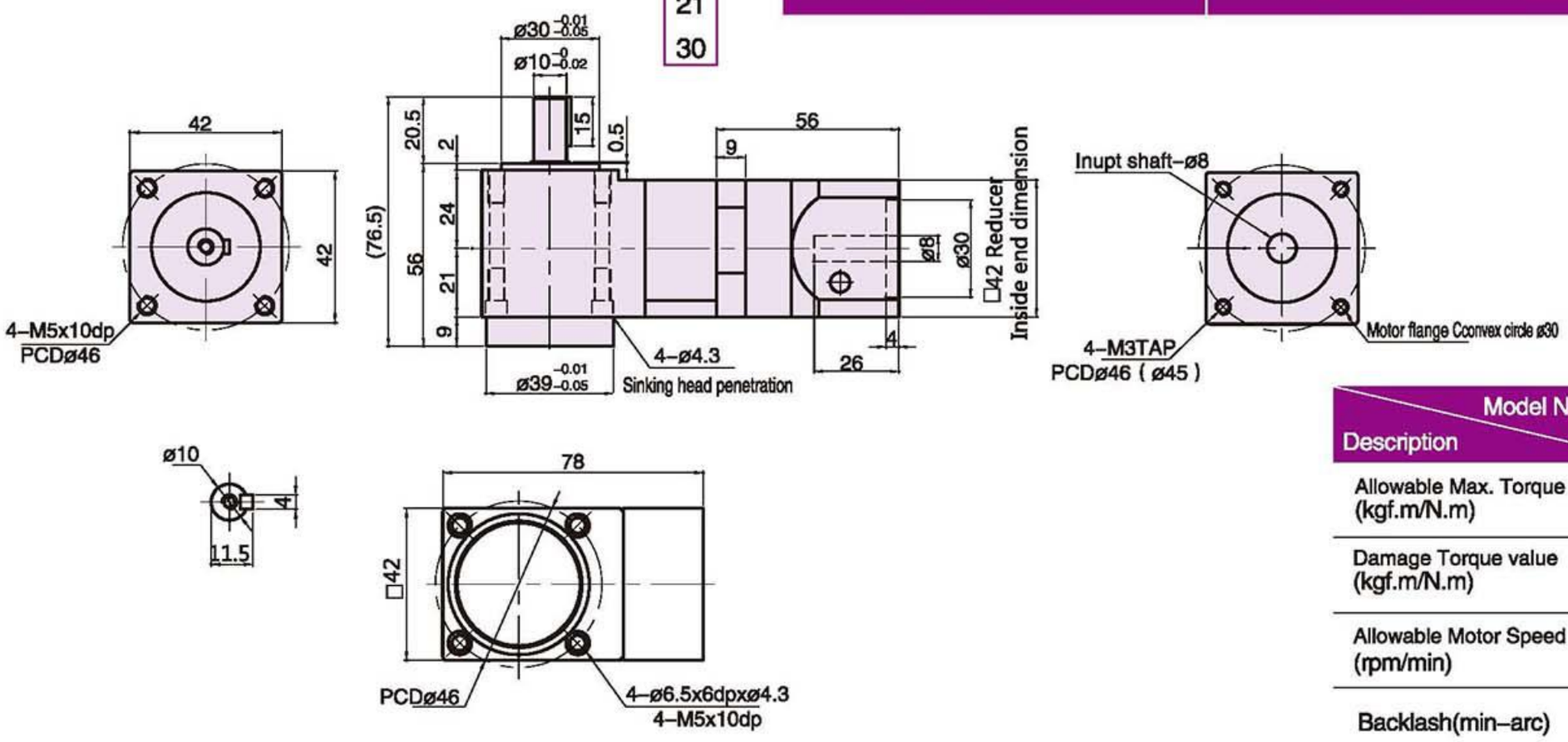

Model No. / Description	ZR42S
Allowable Max. Torque (kgf.m/N.m)	1.5/15
Damage Torque value (kgf.m/N.m)	4/40
Allowable Motor Speed (rpm/min)	2500
Backlash(min-arc)	2
Weight(kg)	0.9

Model Identification

ZR — 60 — 2 — V2

Right Angle Reducer | Specifications | Ratio | Motor

Ratio
2

V1: Servo Ø14 PCD70,M4 V2: Servo Ø14 PCD70,M5	T1: Stepper Ø8 PCD66.67,M4 T2: Stepper Ø8 PCD70,M4 T3: Stepper Ø10 PCD70,M4
200W AC servo motor for each brand	60 stepper motor for each brand

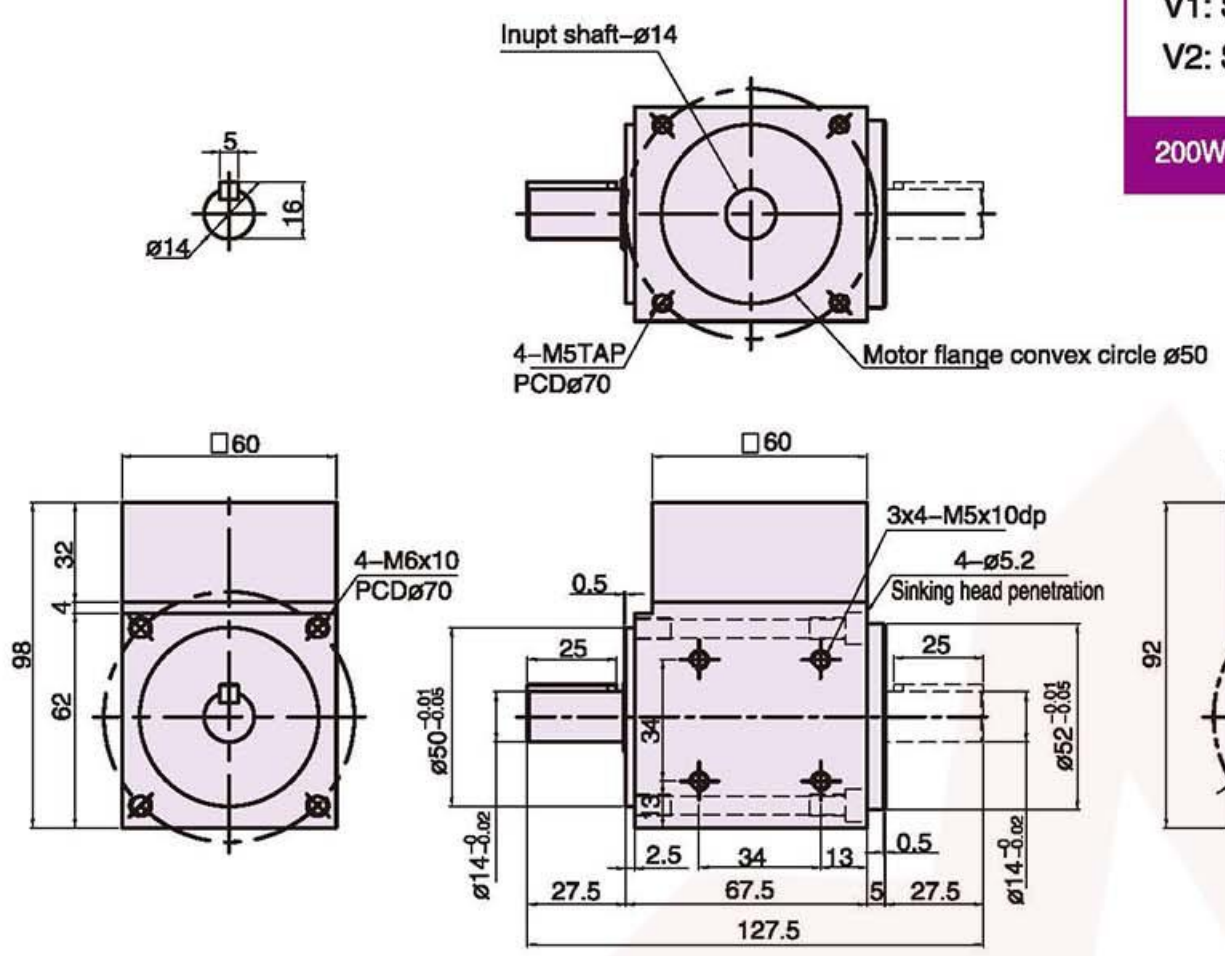

Description \ Model No.	ZR60
Allowable Max. Torque (kgf.m/N.m)	4.5/45
Damage Torque value (kgf.m/N.m)	12/120
Allowable Motor Speed (rpm/min)	2500
Backlash(min–arc)	0.5
Weight(kg)	1.2

ZR — 60S — 6 — V2

Right Angle Reducer | Specifications | Ratio | Motor

Ratio
6
8
10
14
20

V1: Servo Ø14 PCD70,M4 V2: Servo Ø14 PCD70,M5	T1: Stepper Ø8 PCD66.67,M4 T2: Stepper Ø8 PCD70,M4 T3: Stepper Ø10 PCD70,M4
200W AC servo motor for each brand	60 stepper motor for each brand

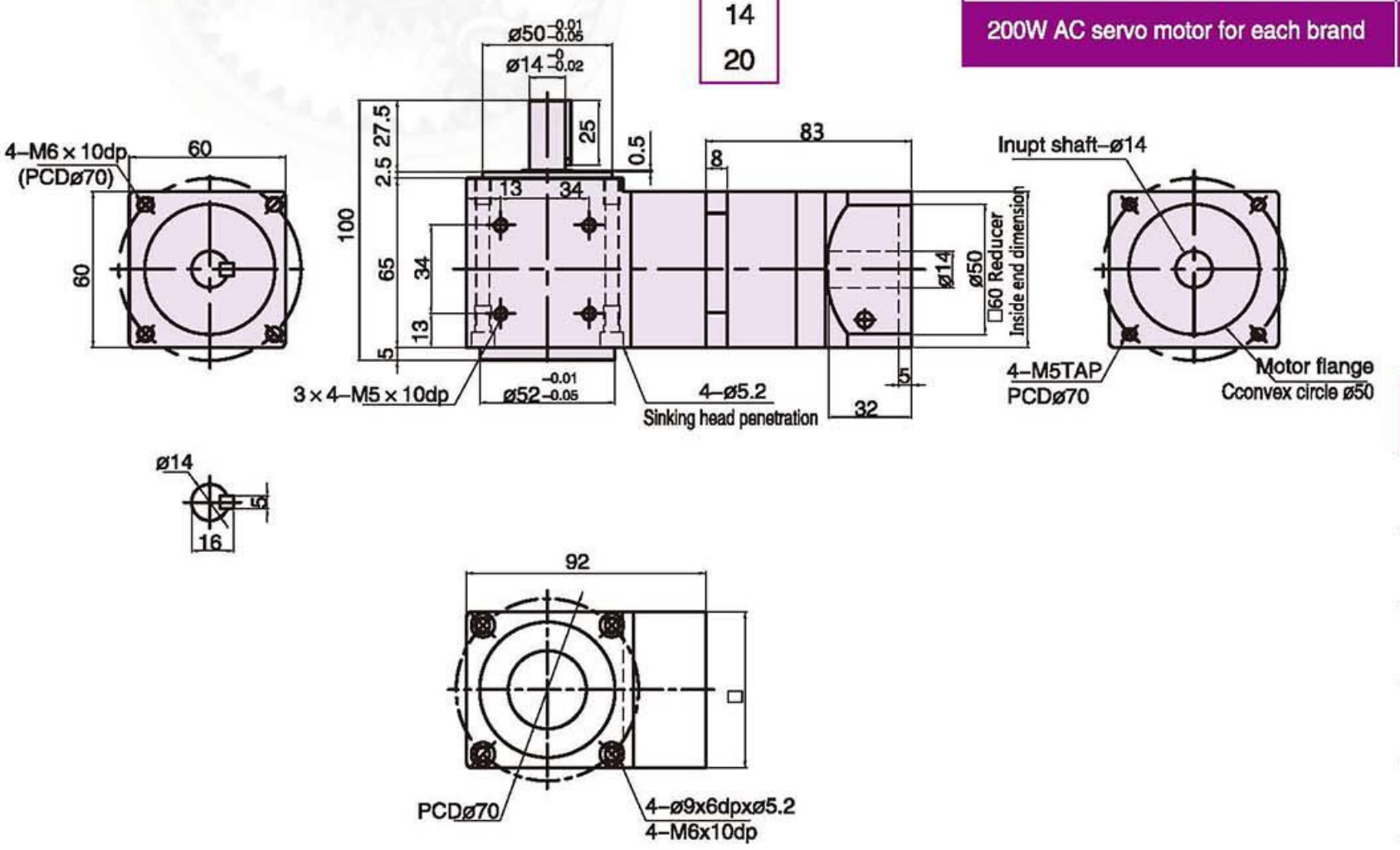

Description \ Model No.	ZR60S
Allowable Max. Torque (kgf.m/N.m)	4.5/45
Damage Torque value (kgf.m/N.m)	12/120
Allowable Motor Speed (rpm/min)	2500
Backlash(min–arc)	2
Weight(kg)	2

Model Identification

ZR — 90 — 2 — V2

Right Angle Reducer | Specifications | Ratio | Motor

2

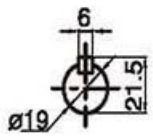

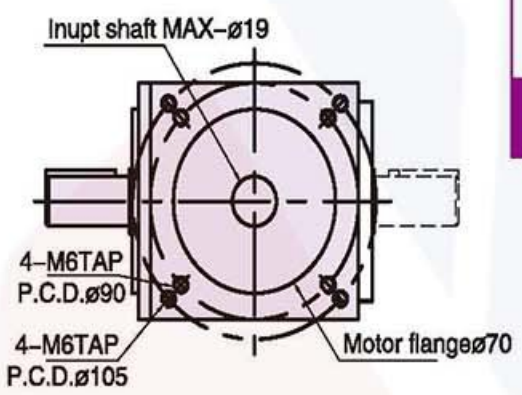

V1: Servo Ø19 PCD90,M5 V2: Servo Ø19 PCD90,M6	T1: Stepper Ø14 PCD98.4,M5 T2: Stepper Ø6 PCD43.8,M3
750W AC servo motor for each brand	86 stepper motor for each brand

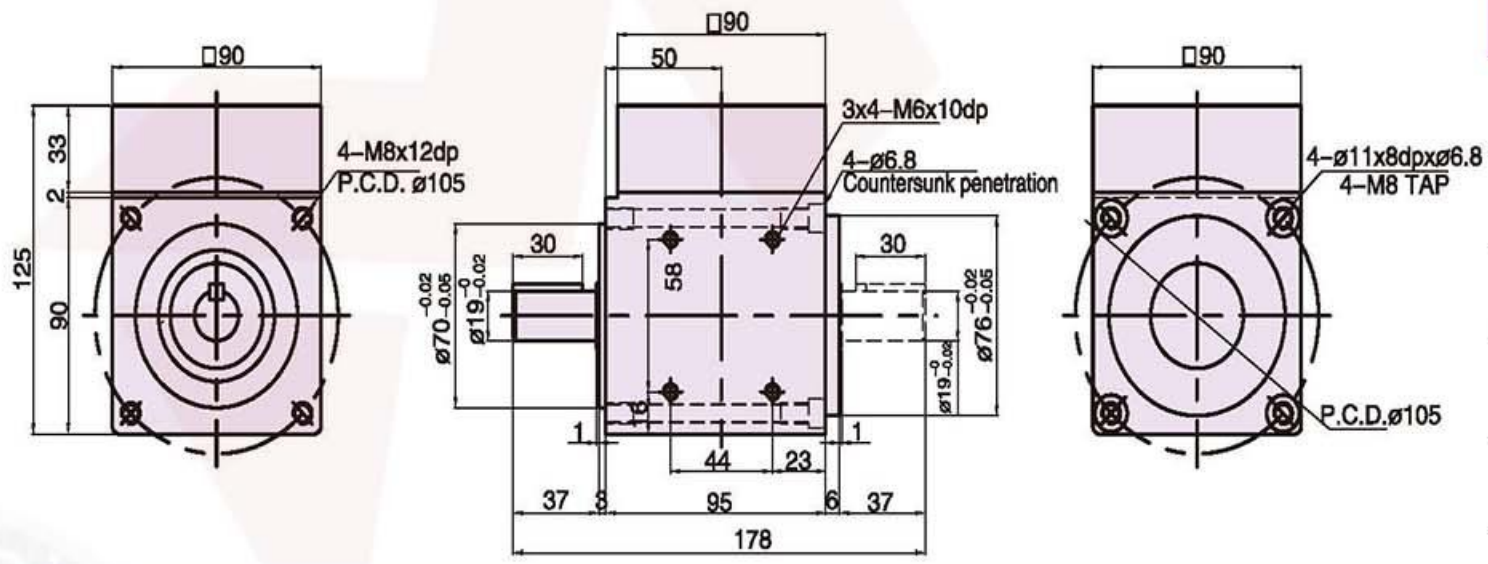

Description \ Model No.	ZR90
Allowable Max. Torque (kgf.m/N.m)	12/120
Damage Torque value (kgf.m/N.m)	32/320
Allowable Motor Speed (rpm/min)	2500
Backlash(min–arc)	0.5
Weight(kg)	3.6

ZR — 90S — 6 — V2

Right Angle Reducer | Specifications | Ratio | Motor

6
8
10
14
20

V1: Servo Ø19 PCD90,M5 V2: Servo Ø19 PCD90,M6	T1: Stepper Ø14 PCD98.4,M5
750W AC servo motor for each brand	86 stepper motor for each brand

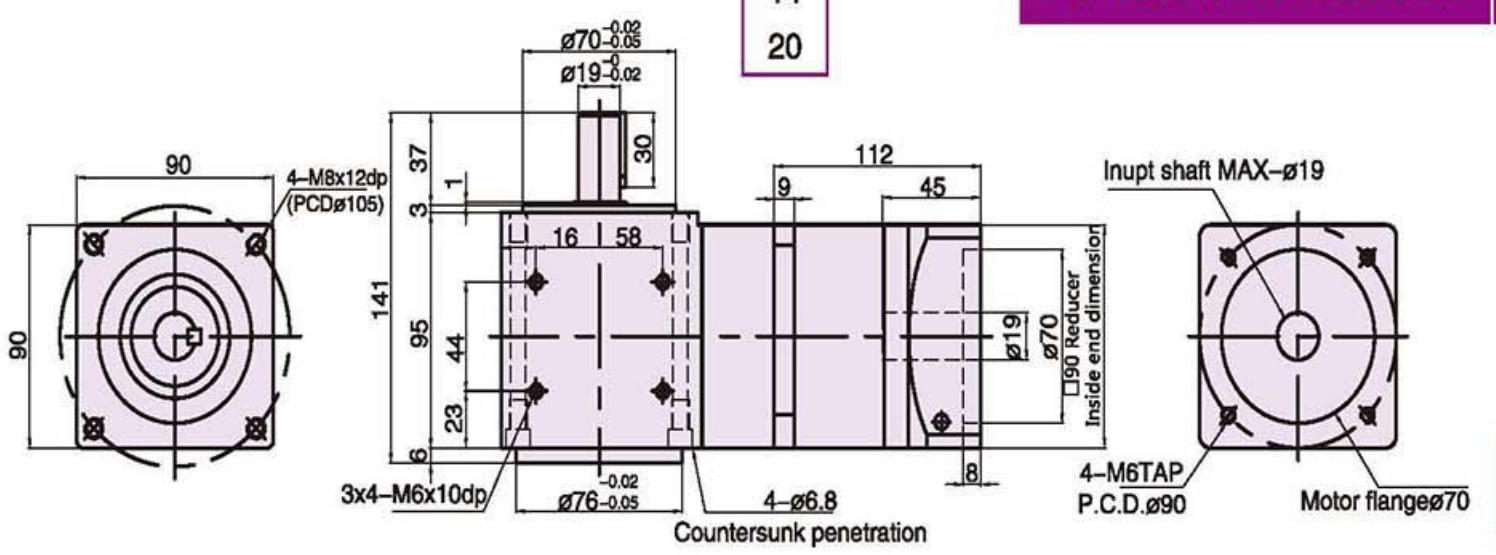

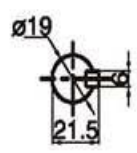

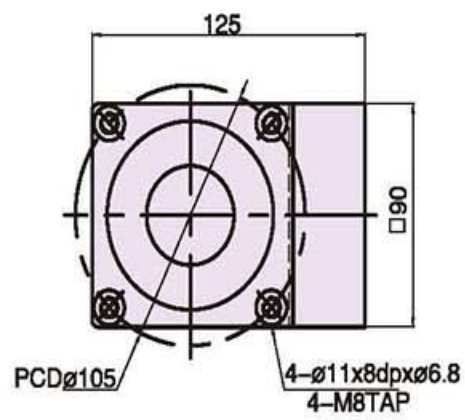

Description \ Model No.	ZR90S
Allowable Max. Torque (kgf.m/N.m)	12/120
Damage Torque value (kgf.m/N.m)	32/320
Allowable Motor Speed (rpm/min)	2500
Backlash(min–arc)	2
Weight(kg)	6.5

Model Identification

ZR — 120 — 2 — V2

Right Angle Reducer | Specifications | Ratio | Motor

2

V1: Servo Ø24 PCD145,M10 V2: Servo Ø24 PCD145,M10	T1: Stepper 19 PCD98.4,M5
1.1~1.5KW AC servo motor for each brand	86 stepper motor for each brand

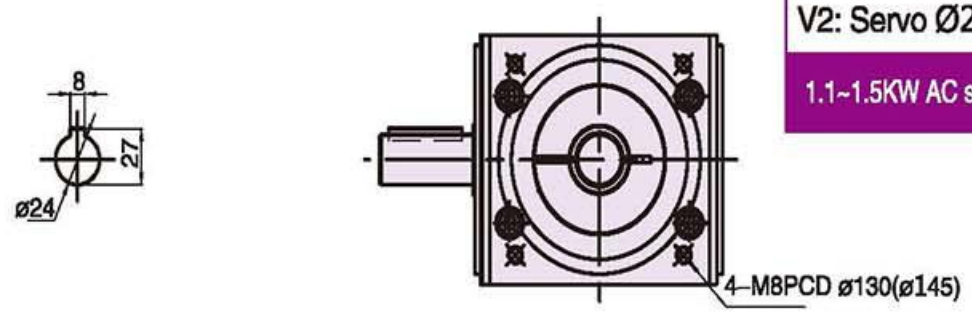

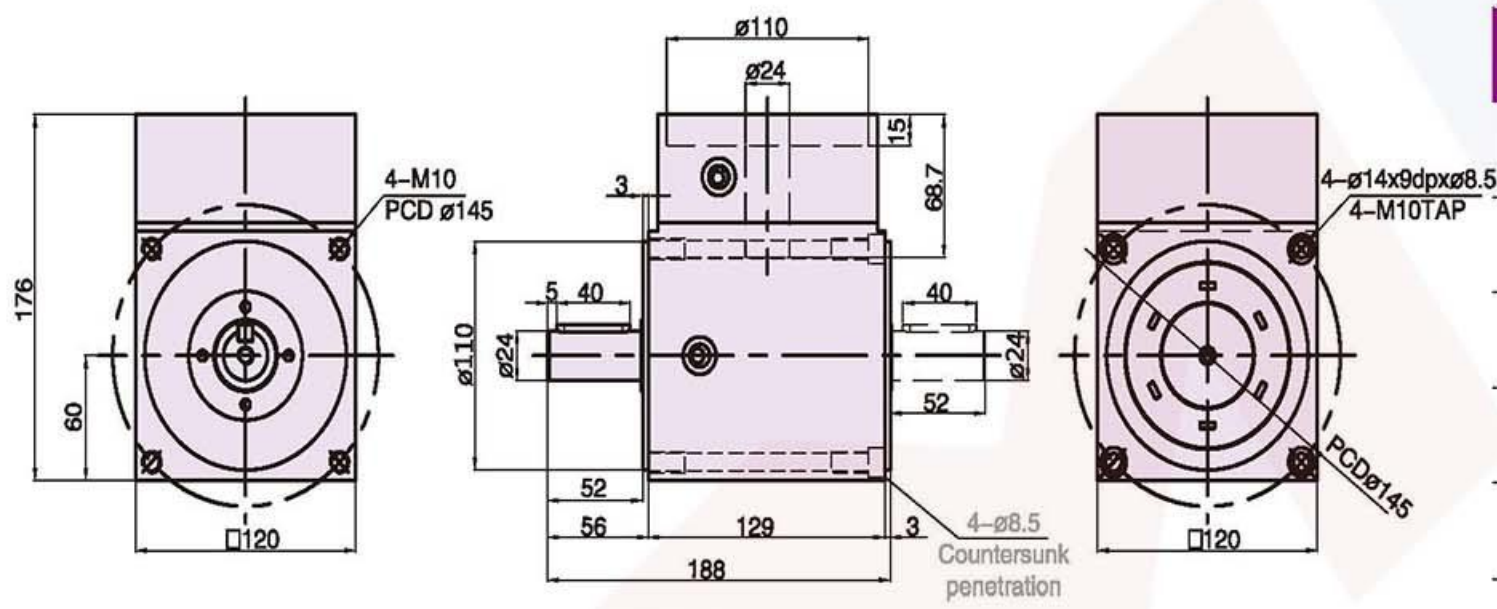

Description \ Model No.	ZR120
Allowable Max. Torque (kgf.m/N.m)	16/160
Damage Torque value (kgf.m/N.m)	45/450
Allowable Motor Speed (rpm/min)	2500
Backlash(min-arc)	0.5
Weight(kg)	8

ZR — 120S — 6 — V2

Right Angle Reducer | Specifications | Ratio | Motor

6
8
10
14
20

V1: Servo Ø24 PCD145,M10 V2: Servo Ø24 PCD145,M10	T1: Stepper 19 PCD98.4,M5
1.1~1.5KW AC servo motor for each brand	86 stepper motor for each brand

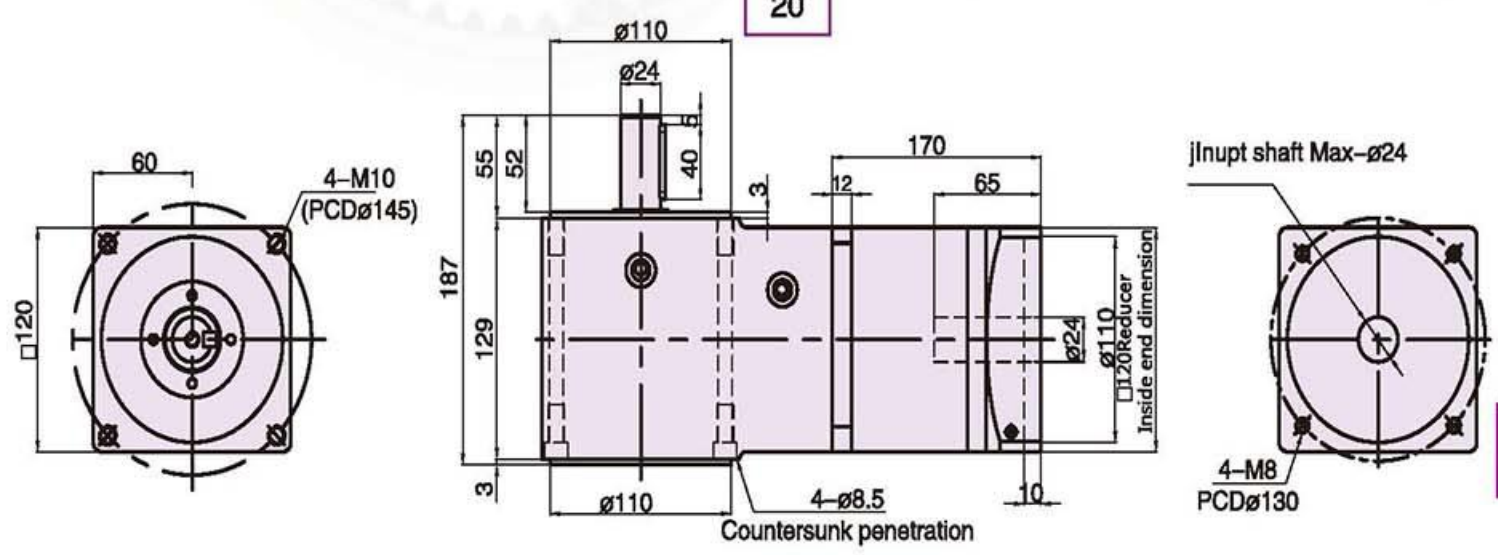

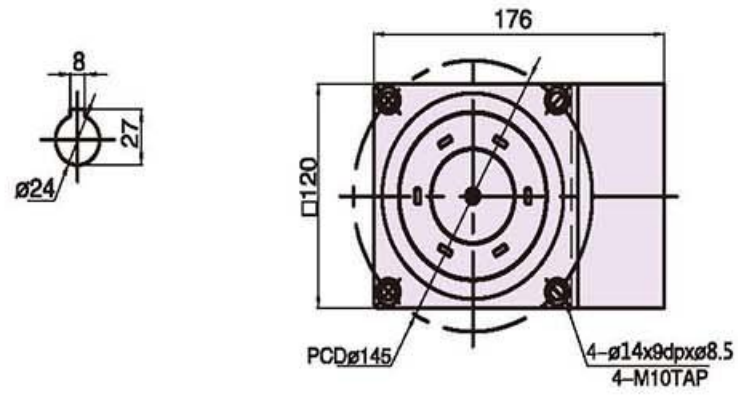

Description \ Model No.	ZR120S
Allowable Max. Torque (kgf.m/N.m)	16/160
Damage Torque value (kgf.m/N.m)	45/450
Allowable Motor Speed (rpm/min)	2500
Backlash(min-arc)	2
Weight(kg)	15.5