Mekind Industrial is committed to offering you quality products
ONE-STOP MOTION CONTROL SOLUTION EXPERT
Specializing in R & D and production of various precision planetary gear transmission products
Click https://mkdsh.com for more information

Headquarters
Shanghai Mekind Industrial Co., Limited
Add.: No.158, Kaile Road, Jinshang District, Shanghai, China
Tel: + 86 131 6621 9128
Email: info@mkdsh.com
Web.: https://mkdsh.com

International Department
Sales Manager□Linda Zhang
Mob.: +86 1316618 0210 (whatsapp/skype/wechat)
Email: gearbox@mkdsh.com

Domestic Department

Zhejiang Office
Add. Room 516, Zhongqing Building, No. 68 Kangqiao Road, Hangzhou, Zhejiang Province
Tel: +86-571-85278905 Fax: +86-571-85278905

Tianjin Office
Add.: No. 218, Building 6, hardware city, Nankai district, Tianjin province
Tel: +862286709632

Guangdong Office
Add. No. 138 Zhen'an Road, Dongguan city, Guangdong province.
Tel: +86-755-23432659 Fax: +86-755-23432659

Shandong Office
Add.: Room 128, Lego international building, Huayuan east road, Jinan city.
Tel.: +86-531-86956332 Fax.: +86-531-86956332

AAW precision type
AAT(M)070AS-AAT(M)320AS series
AAWO70AS-AAW320AS(BS) series

PT/PAW standard type
PTO70A-PT180B serles
PAW055A-PAW18OA(B) series

90 Degree Right Angle Precision Gearbox

- Screw synchronous lift
- Multiple output-shaft types
- Reduction ratio 1/1~1/250
- Suitable for servo motor / stepper motor
- Applicable capacity 100W~15KW

AT/ATF universal type
AT065-AT280 series
ATF065-ATF280 series

Shanghai Mekind Industrial Co., Limited

COMPANY PROFILE

Shanghai Mekind Industrial Co., Limited. (Hereinafter referred to as MKD) is a professional manufacturer in the field of motion control products, which integrates R & D, manufacturing and sales as a whole. The MKD company's R&D team and factory colleagues have more than 20 years of gear design and manufacturing experience and have the core technology of this field and advanced processing equipment. In the early stage, the factory mainly produced worm gear reducers, UDL step-less speed changer, helical gear reducers, hypoid gear reducers, K, R, F, S series hard gear reducers, and PC helical gear reducers. The company is far-sighted and has laid out the company's future development direction in advance. In the mid-term, MKD cooperated with the German reducer technical team to establish a precision gearbox division to cooperate in the development of high-level high-precision gear reducers, including planetary reducers and harmonic reducers (American genius inventor C W.Musser created and invented the principle of wave gear device), 90-degree right-angle servo gearbox (suitable for different installation and output requirements of automation), cycloidal pinwheel RV reducer (suitable for multi-joint robot industry). Also, the company produces related products in the motion control field such as precision rack and pinion, coupling, linear motor, servo motor, etc. Meanwhile, MKD company also provide non-standard customized reducer services. The precision planetary reducer produced by the MKD company has three characteristics of low backlash (3 ~ 8 arcmin), low noise (60dAB), and high efficiency (>=95%). The size and accuracy are fully matched with Japanese and German reducers, and can directly replace German and Japanese brand reducers. The products are suitable for servo motors and stepper motors produced by domestic and foreign servo factories, such as Panasonic, Yaskawa, Omron, Mitsubishi, Schneider, Delta, Siemens, MOOG, Beckoff, Festo, Leadshine, etc. Our company's precision reducers are widely used in laser cutting machines, woodworking engraving machines, gantry machine tools, industrial robots, 3C automation, plastic machinery, three-dimensional parking lots, photovoltaic equipment, automobile manufacturing, lithium batteries, milling machines, full servo tissue machinery, precision embossing Printing machines, servo pipe benders, precision coating machines, CNC spring machines, and other highly automated equipment.

The MKD factory matches a large inventory of standard gearboxes and flanges suitable for different motor input sizes, which can achieve the fastest delivery time of 7~10 working days, saving customers costs in terms of time.

MKD company's products have passed the ISO9001: 2015 quality management system, the European CE certification, and the US UL certification. The products have been sold to more than 100 countries at home and abroad, and have been widely recognized and repurchased by European and American customers who have high-quality requirements.
products, timely and fast services, and striving to be a leader in the transmission field. Your satisfaction is our eternal pursuit.

PRODUCTION WORKSHOP

FAST DELIVERY TIME

CUSTOMIZED SERVICE IS AVAILABLE

COMPETITIVE PRICE WITH TOP QUALITY

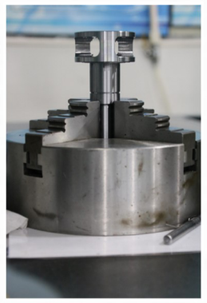

ALTERNATIVES TO BRAND SPEED REDUCERS

ALL-ROUND PROFESSIONAL TECHNICAL SUPPORT

BROAD RANGE OF SPEED REDUCERS FOR SELECTION

Product Application Industry

Semiconductor liquid crystal manufacturing equipment, robots, machine tools, and other frontier areas requiring precision motion control are widely used.

The walking shaft of a robot (rack and pinion)

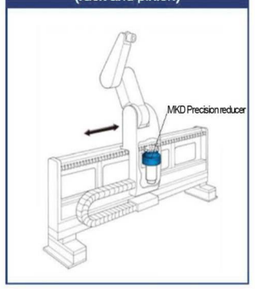

Gantry robot of machine tool

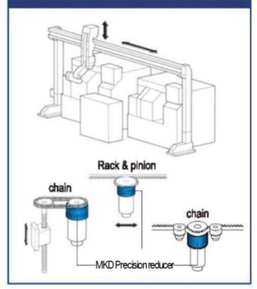

Horizontal multi-joint robot

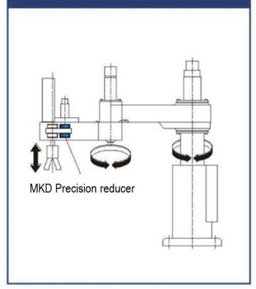

Wafer handling robot

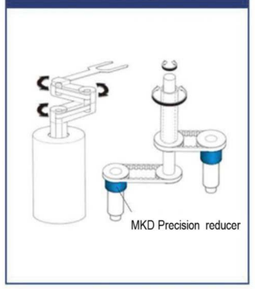

Stamping equipment (riveting)

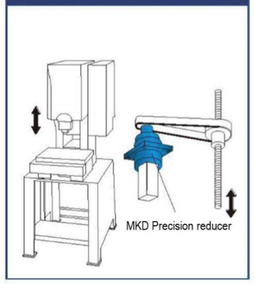

Pipe bending machine

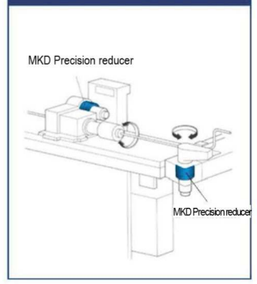

Injection mold taken–out robot

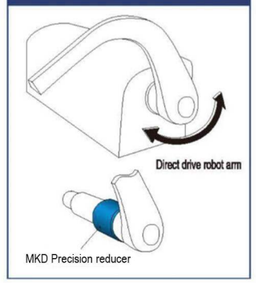

Rotary tower knife frame rotation of machine tool

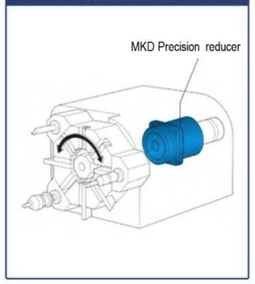

The XY axis of machine tool

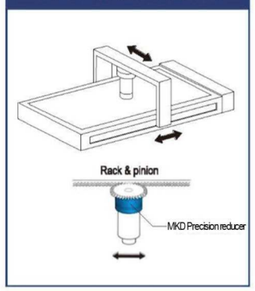

Indexing table drive

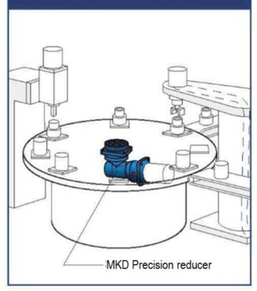

Roller drive for daubing use

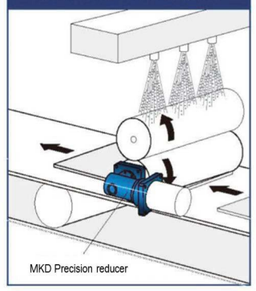

Pulley for loader use

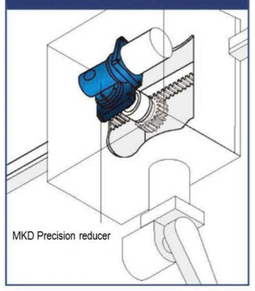

Shaft input belt drive

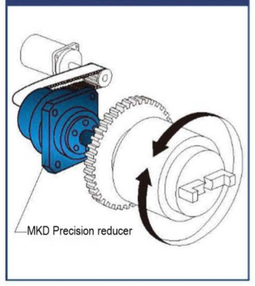

Liquid crystal glass substrate handling robot

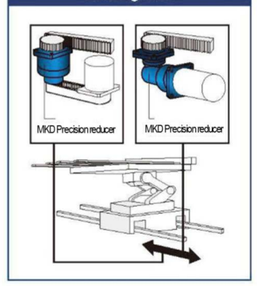

Tensile testing machine

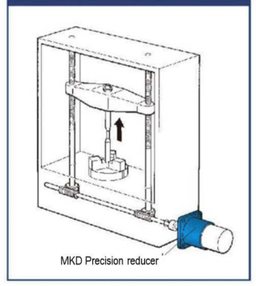

Roof walking van

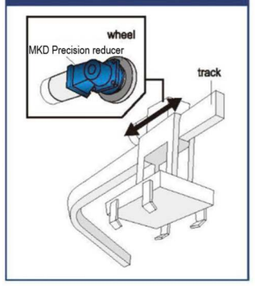

Unmanned vehicle

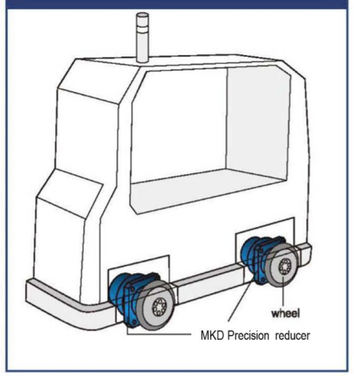

Robot for working in height

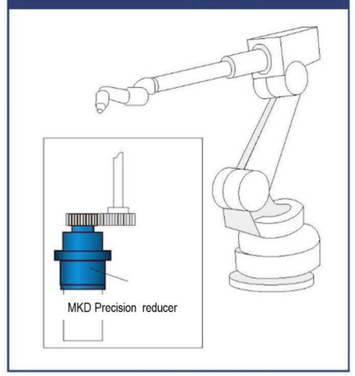

Roll up

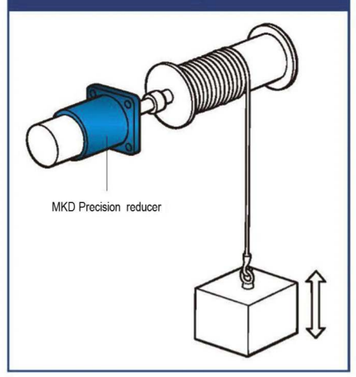

Rotate

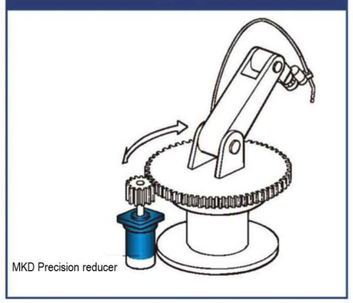

Transport

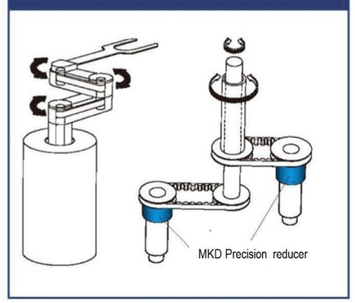

Angle (positioning) control

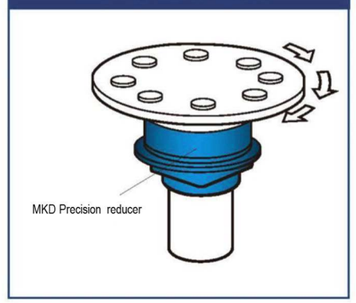

Two axis control (XY workbench)

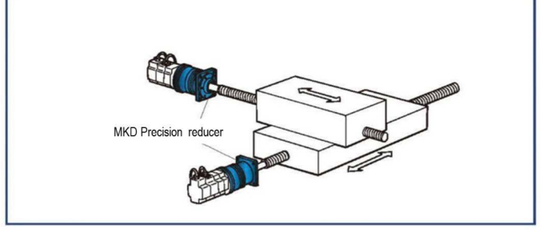

Roller drive

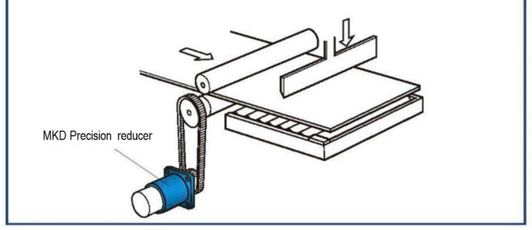

Pipe bending machine

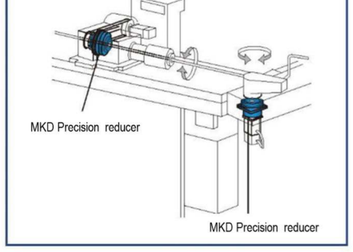

Punching (riveting)

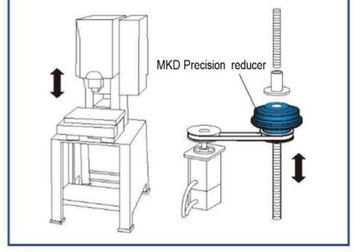

Printed circuit board inspection device

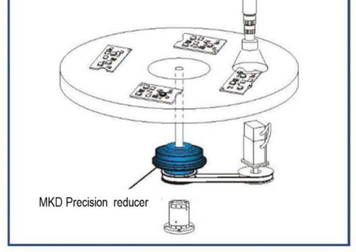

CONTENTS

AT
Shaft Input Steering Gearbox — AT-series — 01 - 08

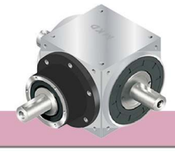

AT-F
Flange Input 90 Degree Reducer — AT-F series — 09 - 24

PAW-A(B)
Standard Type 90 Degree Reducer — PAW-A(B) series — 25 - 32

PT
Standard Type Steering Gearbox — PT series — 33 - 37

AAW-AS(BS)
Precision Type 90 Degree Reducer — AAW-AS(BS) series — 39 - 47

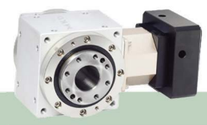

AAW-BS
90 Degree Screw Reducer — AAW-BS series — 48

AATM
Precision Type Steering Gearbox — AATM series — 49 - 53

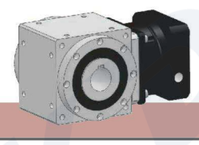

AAT
Precision Type Steering Gearbox — AAT series — 54 - 56

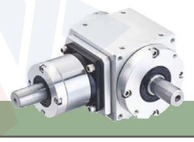

AATM-2AX
90 Degree Two Shaft Steering Gearbox — AATM-2AX — 59 - 60

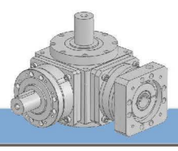

Purchase of Reducer

AT065 – L – 1 – S1

Reducer Mode
AT065, AT075, AT090, AT110, AT140, AT170, AT210, AT240, AT280

Reduction Ratio
1, 1.5, 2, 3, 4, 5

Reducer Type
L / L1 / H / C / R1 / LM / RM / 4M

Selection of Shaft Type
S1: Smooth Straight Shaft
S2: Attached Key Straight Shaft

Selection Example : AT065–L–1–S1

AT210 – FL1 – 200 – S1 / MOTOR

Reducer Model
AT065, AT075, AT090, AT110, AT140, AT170, AT210, AT240, AT280

Reduction Ratio
1–Stage: 1, 1.5, 2, 3, 4, 5
2–Stage: 7, 10, 15, 20, 25, 35, 50
3–Stage: 75, 100, 125, 150, 200, 250, 350, 500

Motor Model
Motor Manufacture & Model

Reducer Types
FL / FLM1 / FLM2 / FL1 / FL1M1 / FL1M2 / FR1 / FR1M1 / FR1M2 / FH / FHM1 / FHM2 / FC / FCM1 / FCM2

Shaft Type Selection
S1: Smooth Straight Shaft
S2: Attached Key Straight Shaft

Selection Example : AT210–FL1–200–S1 / SIEMENS 1FK6 032–6AK71

AT Double Output Shaft Series
Performance of Reducer

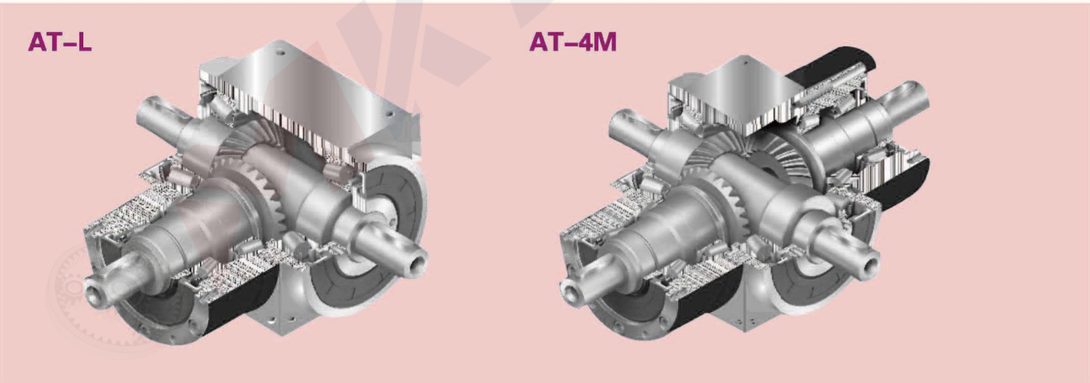

1. Integrated stainless steel body ensures maximum rigidity and corrosion resistance. Multiple precision machined surface for easy assembly.

2. The adoption of the top spiral worm gear design software and the optimized design of contact tooth surface make the even load and allow high torque output.Gears are made of high strength carburizing alloy steel and the grinding precision is up to the standard of DIN 5 level .

3. Multiple stainless steel output and input shaft design can be applied to various of industrial applications needs.

4. The combination of high–precision grinded worm bevel gear set and the optimized the design of planetary gear set can make the reduction speed up to 500:1.

5. High torque and low backlash design of the compact structure is suitable for the application of precision servo.

6. Patented oil seal design, maintenance–free without replacing the lubrication oil, long operating life.

Weight

Model No.		Stage	Ratio	AT065	AT075	AT090	AT110	AT140	AT170	AT210	AT240	AT280
L Series	kg	1	1~5	2.6	4.2	6.8	11.6	19.8	34.8	66.2	98.1	155.7
L1 Series		1	1~5	2.6	4.1	6.7	11.5	19.5	34.2	65.1	96.6	153.4
H Series		1	1~5	2.5	3.9	6.4	11.0	18.1	31.6	60.0	89.4	143.4
C Series		1	1~5	2.8	4.2	6.9	11.4	19.6	33.7	63.3	97.9	149.1
R1 Series		1	1~5	2.6	4.1	6.7	11.5	19.5	34.2	65.1	96.6	153.4
LM Series		1	1	3.5	5.6	9.0	15.2	24.1	42.4	81.4	122.0	190.9
RM Series		1	1	3.5	5.6	9.0	15.2	24.1	42.4	81.4	122.0	190.9
4M Series		1	1	3.5	5.6	9.1	15.4	24.8	42.6	82.5	123.5	193.3

Double Output Shaft Series
Product Specification

Files of Reducer Performance

Specification		Stage	Ratio^	AT065 L AT065 L1 AT065 H AT065 C AT065 R1 AT065 LM AT065 RM AT065 4M	AT075 L AT075 L1 AT075 H AT075 C AT075 R1 AT075 LM AT075 RM AT075 4M	AT090 L AT090 L1 AT090 H AT090 C AT090 R1 AT090 LM AT090 RM AT090 4M	AT110 L AT110 L1 AT110 H AT110 C AT110 R1 AT110 LM AT110 RM AT110 4M	AT140 L AT140 L1 AT140 H AT140 C AT140 R1 AT140 LM AT140 RM AT140 4M	AT170 L AT170 L1 AT170 H AT170 C AT170 R1 AT170 LM AT170 RM AT170 4M	AT210 L AT210 L1 AT210 H AT210 C AT210 R1 AT210 LM AT210 RM AT210 4M	AT240 L AT240 L1 AT240 H AT240 C AT240 R1 AT240 LM AT240 RM AT240 4M	AT280 L AT280 L1 AT280 H AT280 C AT280 R1 AT280 LM AT280 RM AT280 4M
Rated Output Torque / T_{2N}	Nm	1	1	25	45	78	150	360	585	1,300	2,150	3,200
			1.5	25	45	78	150	360	585	1,300	2,150	3.200
			2	24	42	68	150	330	544	1,220	2,010	3,050
			3	18	33	54	120	270	450	1,020	1,650	2,850
			4	13	28	48	100	224	376	860	1,410	2,300
			5	12	25	40	85	196	320	740	1,210	2,000
Max.acceleration torqueb / T_{2B}	Nm	1	1~5	1.5 Times of Rated Output Torque								
Max.acceleration input speed / n_{1B}	rpm	1	1~5	7,500	6,500	5,500	4,500	3,500	3,000	2,200	2,000	1,700
Backlash	arcmin	1	1~5	≤6	≤6	≤6	≤6	≤6	≤6	≤6	≤6	≤6
Allowable Radial Force / F_{1rB}[2] Input Shaft d1	N	1	1~5	700	950	1,450	2,100	2,700	3,800	7,800	9,600	10,500
Allowable Radial Force / F_{2rB}[3] Output Shaft d2	N	1	1~5	900	1,100	1,700	2,700	4,800	6,600	11,500	16,000	18,000
Allowable Axial Force / F_{1aB}[2] Input Shaft d1	N	1	1~5	350	425	725	1,050	1,350	1,900	3,900	4,800	5,250
Allowable Axial Force / F_{2aB}[3] Output Shaft d2	N	1	1~5	450	550	850	1,350	2,400	3,300	5,750	8,500	9,000
Service Life	hr	1	1~5	20,000*								
Efficiency / η	%	1	1~5	≥98%								
Operating Temp	°C	1	1~5	-10°C ~ 90°C								
Lubrication				Fully Synthetic Grease								
Noise Level(n1=1500rpm，No load)	dB(A)	1	1~5	≤68	≤70	≤74	≤76	≤77	≤78	≤80	≤82	≤83

1. Ratio（$i=N_{in}/N_{out}$）
* Continuous operation will reduce service life by half
AT-LM/RM/4M only provides ratio 1:1

2. Act on the center of the input shaft @n_{1B}
3. Act on the center of the output shaft @n_{1B}
* Backlash value is measured at 2% of rated torque T_{2N}

Rotary Inertia of Reducer

Specification		Stage	Ratio^	AT065 L AT065 L1 AT065 H AT065 C AT065 R1 AT065 LM AT065 RM AT065 4M	AT075 L AT075 L1 AT075 H AT075 C AT075 R1 AT075 LM AT075 RM AT075 4M	AT090 L AT090 L1 AT090 H AT090 C AT090 R1 AT090 LM AT090 RM AT090 4M	AT110 L AT110 L1 AT110 H AT110 C AT110 R1 AT110 LM AT110 RM AT110 4M	AT140 L AT140 L1 AT140 H AT140 C AT140 R1 AT140 LM AT140 RM AT140 4M	AT170 L AT170 L1 AT170 H AT170 C AT170 R1 AT170 LM AT170 RM AT170 4M	AT210 L AT210 L1 AT210 H AT210 C AT210 R1 AT210 LM AT210 RM AT210 4M	AT240 L AT240 L1 AT240 H AT240 C AT240 R1 AT240 LM AT240 RM AT240 4M	AT280 L AT280 L1 AT280 H AT280 C AT280 R1 AT280 LM AT280 RM AT280 4M
Rotary Inertia	kg • cm²	1	1	0.51	1.30	3.16	7.70	23.57	58.99	195.40	369.34	799.12
			1.5	0.64	1.16	2.82	6.74	19.37	49.28	155.45	283.58	595.78
			2	0.44	1.11	2.70	6.31	17.75	45.35	140.24	249.74	511.76
			3	0.43	1.09	2.66	6.17	17.18	44.01	134.95	237.71	483.06
			4	0.43	1.09	2.65	6.13	17.06	43.70	133.58	234.72	476.26
			5	0.43	1.09	2.65	6.12	17.02	43.60	133.14	233.67	473.58

AT–L Series

Double Output shaft Type

Size（1–stage, ratio i=1~5）

Dimensions：

Unit:mm

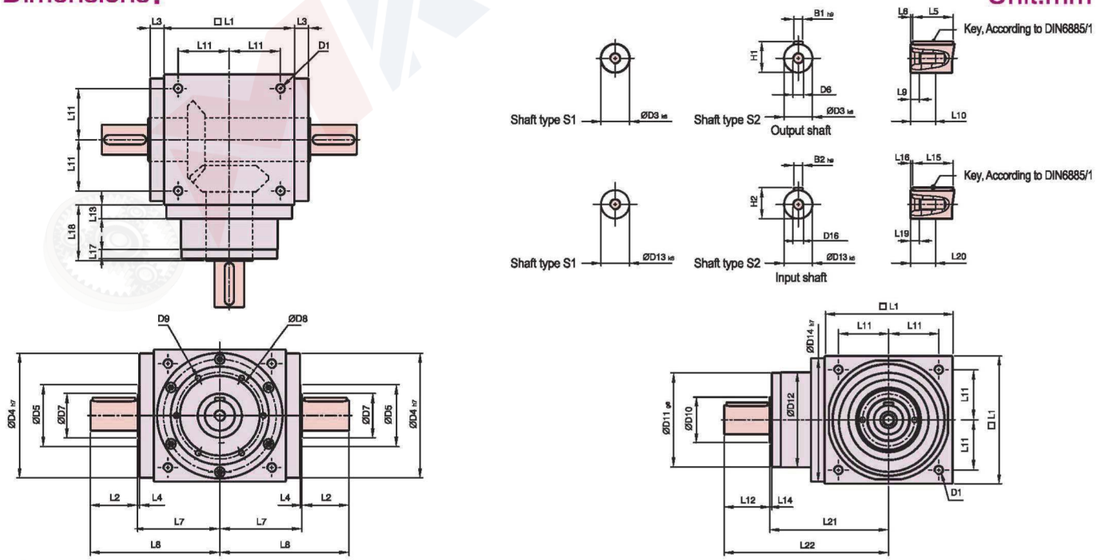

Specifications：

Unit:mm

Sizes	AT065 L	AT075 L	AT090 L	AT110 L	AT140 L	AT170 L	AT210 L	AT240 L	AT280 L
D1	M4	M6	M6	M8	M10	M12	M16	M16	M16
D3 k6	13	16	18	22	32	40	50	55	60
D4 h7	63	73	88	108	135	165	205	235	275
D5	31	35	43	53	68	83	104	124	144
D6	M4	M5	M5	M8	M12	M16	M16	M16	M20
D7	21	22	28	33	47	55	75	85	110
D8	53	62	76	95	92	114	142	160	176
D9	4xM4xL7	4xM5xL8	4xM5xL8	6xM6xL10	6xM6xL10	6xM8xL12.5	6xM8xL12.5	6xM8xL12.5	6xM10xL15
D10	15.4	20.4	25.8	35.8	49.8	59.3	79.3	92.3	102.3
D11 g6	62.9	72.9	87	107	103	127	158	178	198
D12	62	72	86	106	104	128	160	180	200
D13 k6	13	16	18	22	32	40	50	55	60
D14 h7	63	73	88	108	135	165	205	235	275
D16	M4	M5	M5	M8	M12	M16	M16	M16	M20
L1	65	75	90	110	140	170	210	240	280
L2	19.5	30	35	40	50	60	75	85	110
L3	13	14.5	15	15	15	15	20	25	25
L4	2	2	2	2	2	2	2	2	2
L5	16	25	28	32	45	50	70	80	100
L6	2	2.5	3.5	4	2.5	5	2.5	2.5	5
L7	47.5	54	62	72	87	102	127	147	167
L8	67	84	97	112	137	162	202	232	277
L9	4.5	4.8	4.8	7.2	10	12	12	12	15
L10	10	12.5	12.5	19	28	36	36	36	42
L11	27	30	36	44	55	67	85	95	110
L12	19.5	30	35	40	50	60	75	85	110
L13	13	15	15	15	15	15	20	25	25
L14	2	2	2	2	2	2	2	2	2
L15	16	25	28	32	45	50	70	80	100
L16	2	2.5	3.5	4	2.5	5	2.5	2.5	5
L17	6	8	8	8	10	10	10	10	10
L18	43	52.5	55	60	60	70	90	105	120
L19	4.5	4.8	4.8	7.2	10	12	12	12	15
L20	10	12.5	12.5	19	28	36	36	36	42
L21	75.5	90	100	115	130	155	195	225	260
L22	95	120	135	155	180	215	270	310	370
B1 h9	5	5	6	6	10	12	14	16	18
B2 h9	5	5	6	6	10	12	14	16	18
H1	15	18	20.5	24.5	35	43	53.5	59	64
H2	15	18	20.5	24.5	35	43	53.5	59	64

AT–L1 / AT–R1 Series

Single–side Output shaft Type

Size（1–stage, ratio i=1~5）

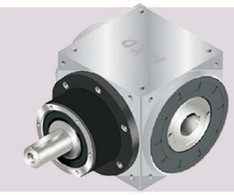

Dimensions：

Unit:mm

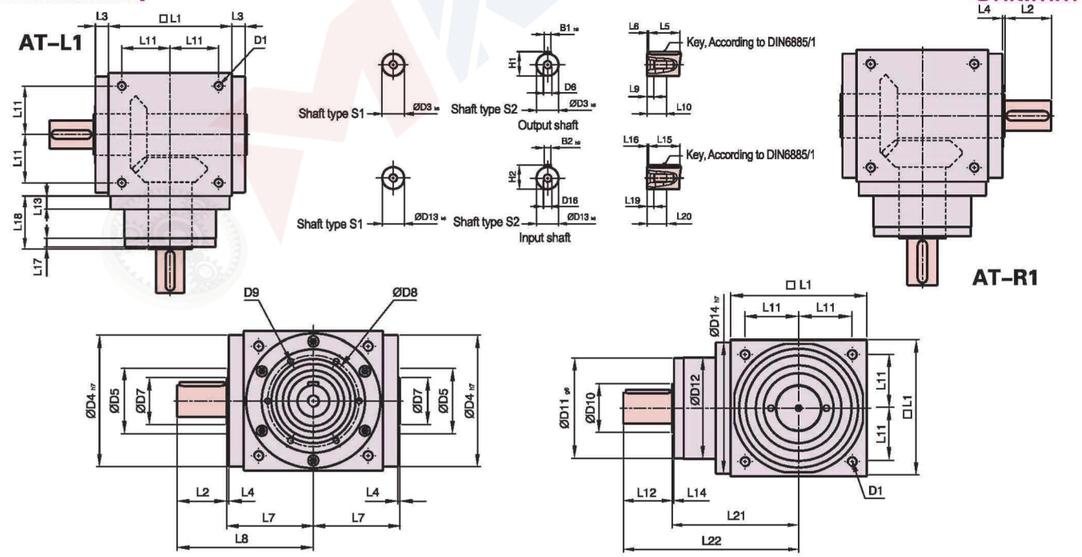

Specifications：

Unit:mm

Sizes	AT065 L1/R1	AT075 L1/R1	AT090 L1/R1	AT110 L1/R1	AT140 L1/R1	AT170 L1/R1	AT210 L1/R1	AT240 L1/R1	AT280 L1/R1
D1	M4	M6	M6	M8	M10	M12	M16	M16	M16
D3 k6	13	16	18	22	32	40	50	55	60
D4 h7	63	73	88	108	135	165	205	235	275
D5	31	35	43	53	68	83	104	124	144
D6	M4	M5	M5	M8	M12	M16	M16	M16	M20
D7	21	22	28	33	47	55	75	85	110
D8	53	62	76	95	92	114	142	160	176
D9	4xM4xL7	4xM5xL8	4xM5xL8	6xM6xL10	6xM6xL10	6xM8xL12.5	6xM8xL12.5	6xM8xL12.5	6xM10xL15
D10	15.4	20.4	25.8	35.8	49.8	59.3	79.3	92.3	102.3
D11 g6	62.9	72.9	87	107	103	127	158	178	198
D12	62	72	86	106	104	128	160	180	200
D13 k6	13	16	18	22	32	40	50	55	60
D14 h7	63	73	88	108	135	165	205	235	275
D16	M4	M5	M5	M8	M12	M16	M16	M16	M20
L1	65	75	90	110	140	170	210	240	280
L2	19.5	30	35	40	50	60	75	85	110
L3	13	14.5	15	15	15	15	20	25	25
L4	2	2	2	2	2	2	2	2	2
L5	16	25	28	32	45	50	70	80	100
L6	2	2.5	3.5	4	2.5	5	2.5	2.5	5
L7	47.5	54	62	72	87	102	127	147	167
L8	67	84	97	112	137	162	202	232	277
L9	4.5	4.8	4.8	7.2	10	12	12	12	15
L10	10	12.5	12.5	19	28	36	36	36	42
L11	27	30	36	44	55	67	85	95	110
L12	19.5	30	35	40	50	60	75	85	110
L13	13	15	15	15	15	15	20	25	25
L14	2	2	2	2	2	2	2	2	2
L15	16	25	28	32	45	50	70	80	100
L16	2	2.5	3.5	4	2.5	5	2.5	2.5	5
L17	6	8	8	8	10	10	10	10	10
L18	43	52.5	55	60	60	70	90	105	120
L19	4.5	4.8	4.8	7.2	10	12	12	12	15
L20	10	12.5	12.5	19	28	36	36	36	42
L21	75.5	90	100	115	130	155	195	225	260
L22	95	120	135	155	180	215	270	310	370
B1 h9	5	5	6	6	10	12	14	16	18
B2 h9	5	5	6	6	10	12	14	16	18
H1	15	18	20.5	24.5	35	43	53.5	59	64
H2	15	18	20.5	24.5	35	43	53.5	59	64

AT–H Series
Hole Input Type
Size（1–stage, ratio i=1~5）

Dimensions：

Unit:mm

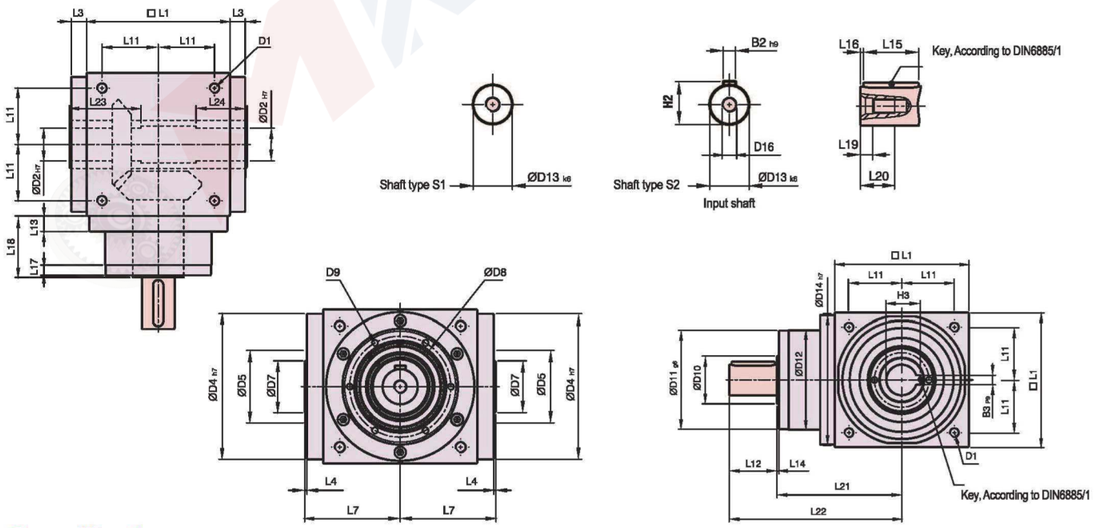

Specifications：

Unit:mm

Sizes	AT065 H	AT075 H	AT090 H	AT110 H	AT140 H	AT170 H	AT210 H	AT240 H	AT280 H
D1	M4	M6	M6	M8	M10	M12	M16	M16	M16
D2 H7	13	14	18	22	32	40	50	55	60
D4 h7	63	73	88	108	135	165	205	235	275
D5	31	35	43	53	68	83	104	124	144
D7	21	22	28	33	47	55	75	85	110
D8	53	62	76	95	92	114	142	160	176
D9	4xM4xL7	4xM5xL8	4xM5xL8	6xM6xL10	6xM6xL10	6xM8xL12.5	6xM8xL12.5	6xM8xL12.5	6xM10xL15
D10	15.4	20.4	25.8	35.8	49.8	59.3	79.3	92.3	102.3
D11 g6	62.9	72.9	87	107	103	127	158	178	198
D12	62	72	86	106	104	128	160	180	200
D13 k6	13	16	18	22	32	40	50	55	60
D14 h7	63	73	88	108	135	165	205	235	275
D16	M4	M5	M5	M8	M12	M16	M16	M16	M20
L1	65	75	90	110	140	170	210	240	280
L3	13	14.5	15	15	15	15	20	25	25
L4	2	2	2	2	2	2	2	2	2
L7	47.5	54	62	72	87	102	127	147	167
L11	27	30	36	44	55	67	85	95	110
L12	19.5	30	35	40	50	60	75	85	110
L13	13	15	15	15	15	15	20	25	25
L14	2	2	2	2	2	2	2	2	2
L15	16	25	28	32	45	50	70	80	100
L16	2	2.5	3.5	4	2.5	5	2.5	2.5	5
L17	6	8	8	8	10	10	10	10	10
L18	43	52.5	55	60	60	70	90	105	120
L19	4.5	4.8	4.8	7.2	10	12	12	12	15
L20	10	12.5	12.5	19	28	36	36	36	42
L21	75.5	90	100	115	130	155	195	225	260
L22	95	120	135	155	180	215	270	310	370
L23	40	47	52	53	70	80	95	115	115
L24	30	32	35	35	50	55	65	80	80
B2 h9	5	5	6	6	10	12	14	16	18
B3 P9	5	5	6	6	10	12	14	16	18
H2	15	18	20.5	24.5	35	43	53.5	59	64
H3	15.3	16.3	20.8	24.8	35.3	43.3	53.8	59.3	64.4

AT–C Series
Hole Output Hoop Type
Size（1–stage, ratio i=1~5）

Dimensions：

Unit:mm

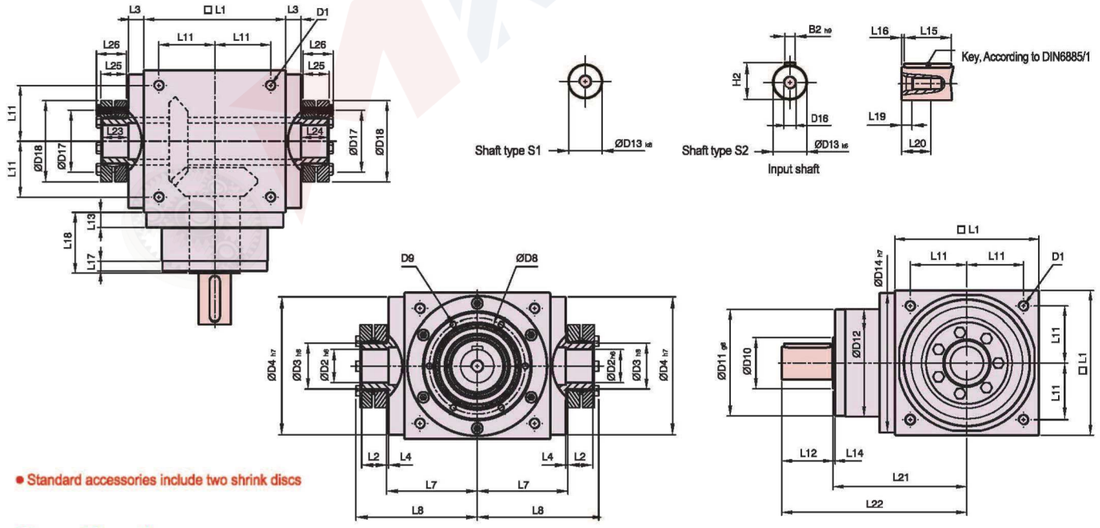

● Standard accessories include two shrink discs

Specifications：

Unit:mm

Sizes	AT065 C	AT075 C	AT090 C	AT110 C	AT140 C	AT170 C	AT210 C	AT240 C	AT280 C
D1	M4	M6	M6	M8	M10	M12	M16	M16	M16
D2 H6	13	14	18	22	32	40	50	55	60
D3 h8	16	16	22	25	44	50	62	68	75
D4 h7	63	73	88	108	135	165	205	235	275
D8	53	62	76	95	92	114	142	160	176
D9	4xM4xL7	4xM5xL8	4xM5xL8	6xM6xL10	6xM6xL10	6xM8xL12.5	6xM8xL12.5	6xM8xL12.5	6xM10xL15
D10	15.4	20.4	25.8	35.8	49.8	59.3	79.3	92.3	102.3
D11 g6	62.9	72.9	87	107	103	127	158	178	198
D12	62	72	86	106	104	128	160	180	200
D13 k6	13	16	18	22	32	40	50	55	60
D14 h7	63	73	88	108	135	165	205	235	275
D16	M4	M5	M5	M8	M12	M16	M16	M16	M20
D17	26	26	36	38	61	70	86	86	100
D18	41	41	50	50	80	90	110	115	138
L1	65	75	90	110	140	170	210	240	280
L2	14	14	18	18	24	26	29	29	30.5
L3	13	14.5	15	15	15	15	20	25	25
L4	2	2	2	2	2	2	2	2	2
L7	47.5	54	62	72	87	102	127	147	167
L8	66	72.5	85	95	116.5	133.5	161.5	181.5	205
L11	27	30	36	44	55	67	85	95	110
L12	19.5	30	35	40	50	60	75	85	110
L13	13	15	15	15	15	15	20	25	25
L14	2	2	2	2	2	2	2	2	2
L15	16	25	28	32	45	50	70	80	100
L16	2	2.5	3.5	4	2.5	5	2.5	2.5	5
L17	6	8	8	8	10	10	10	10	10
L18	43	52.5	55	60	60	70	90	105	120
L19	4.5	4.8	4.8	7.2	10	12	12	12	15
L20	10	12.5	12.5	19	28	36	36	36	42
L21	75.5	90	100	115	130	155	195	225	260
L22	95	120	135	155	180	215	270	310	370
L23	15	15	20	20	26	28	31	31	32.5
L24	15	15	20	20	26	28	31	31	32.5
L25	15	15	19.5	19.5	25.5	27.5	30.5	30.5	32.5
L26	18.5	18.5	23	23	29.5	31.5	34.5	34.5	38
B2 h9	5	5	6	6	10	12	14	16	18
H2	15	18	20.5	24.5	35	43	53.5	59	64

AT–LM / AT–RM Series

Double Output Shaft Opposite Direction Type

Size（1–stage, ratio i=1）

Dimensions：

Unit:mm

AT–LM

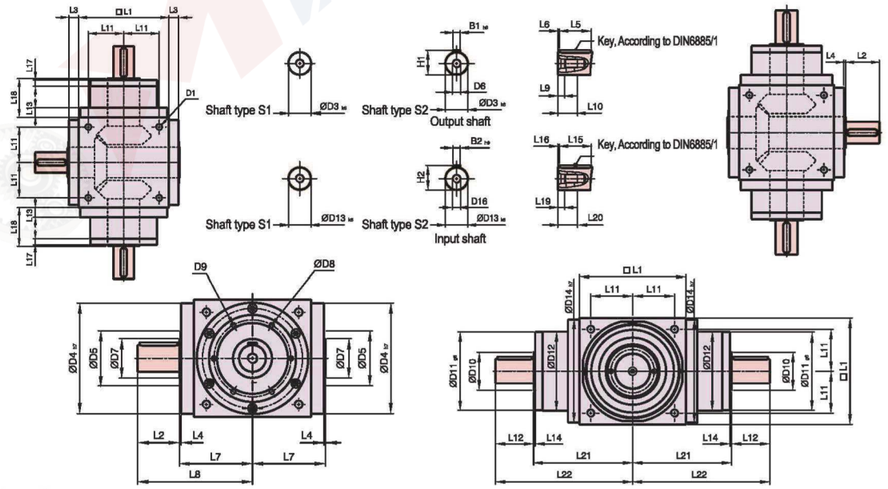

AT–RM

Specifications：

Unit:mm

Sizes	AT065LM/RM	AT075LM/RM	AT090LM/RM	AT110LM/RM	AT140LM/RM	AT170LM/RM	AT210LM/RM	AT240LM/RM	AT280LM/RM
D1	M4	M6	M6	M8	M10	M12	M16	M16	M16
D3 k6	13	16	18	22	32	40	50	55	60
D4 h7	63	73	88	108	135	165	205	235	275
D5	31	35	43	53	68	83	104	124	144
D6	M4	M5	M5	M8	M12	M16	M16	M16	M20
D7	21	22	28	33	47	55	75	85	110
D8	53	62	76	95	92	114	142	160	176
D9	4xM4xL7	4xM5xL8	4xM5xL8	6xM6xL10	6xM6xL10	6xM8xL12.5	6xM8xL12.5	6xM8xL12.5	6xM10xL15
D10	15.4	20.4	25.8	35.8	49.8	59.3	79.3	92.3	102.3
D11 g6	62.9	72.9	87	107	103	127	158	178	198
D12	62	72	86	106	104	128	160	180	200
D13 k6	13	16	18	22	32	40	50	55	60
D14 h7	63	73	88	108	135	165	205	235	275
D16	M4	M5	M5	M8	M12	M16	M16	M16	M20
L1	65	75	90	110	140	170	210	240	280
L2	19.5	30	35	40	50	60	75	85	110
L3	13	14.5	15	15	15	15	20	25	25
L4	2	2	2	2	2	2	2	2	2
L5	16	25	28	32	45	50	70	80	100
L6	2	2.5	3.5	4	2.5	5	2.5	2.5	5
L7	47.5	54	62	72	87	102	127	147	167
L8	67	84	97	112	137	162	202	232	277
L9	4.5	4.8	4.8	7.2	10	12	12	12	15
L10	10	12.5	12.5	19	28	36	36	36	42
L11	27	30	36	44	55	67	85	95	110
L12	19.5	30	35	40	50	60	75	85	110
L13	13	15	15	15	15	15	20	25	25
L14	2	2	2	2	2	2	2	2	2
L15	16	25	28	32	45	50	70	80	100
L16	2	2.5	3.5	4	2.5	5	2.5	2.5	5
L17	6	8	8	8	10	10	10	10	10
L18	43	52.5	55	60	60	70	90	105	120
L19	4.5	4.8	4.8	7.2	10	12	12	12	15
L20	10	12.5	12.5	19	28	36	36	36	42
L21	75.5	90	100	115	130	155	195	225	260
L22	95	120	135	155	180	215	270	310	370
B1 h9	5	5	6	6	10	12	14	16	18
B2 h9	5	5	6	6	10	12	14	16	18
H1	15	18	20.5	24.5	35	43	53.5	59	64
H2	15	18	20.5	24.5	35	43	53.5	59	64

AT–4M Series

Size（1–stage, ratio i=1~5）

Dimensions：

Unit:mm

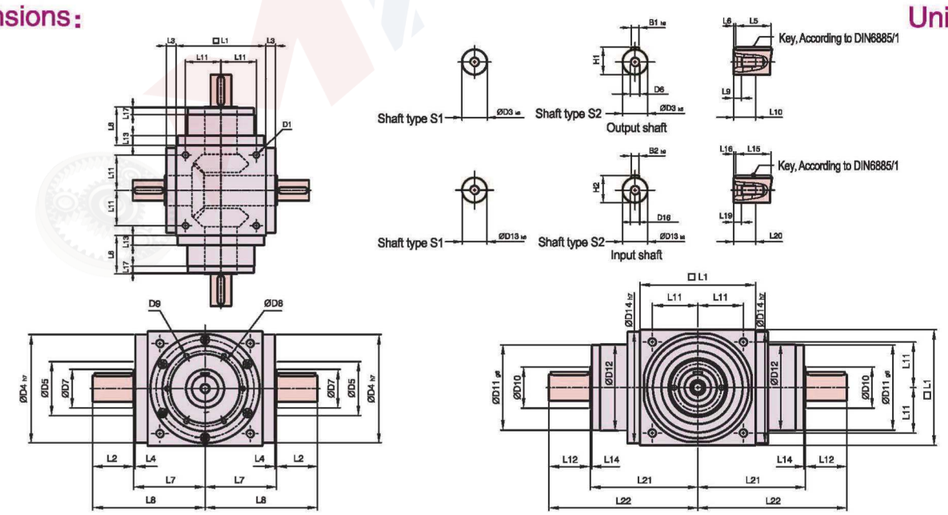

Specifications：

Unit:mm

Sizes	AT065 4M	AT075 4M	AT090 4M	AT110 4M	AT140 4M	AT170 4M	AT210 4M	AT240 4M	AT280 4M
D1	M4	M6	M6	M8	M10	M12	M16	M16	M16
D3 k6	13	16	18	22	32	40	50	55	60
D4 h7	63	73	88	108	135	165	205	235	275
D5	31	35	43	53	68	83	104	124	144
D6	M4	M5	M5	M8	M12	M16	M16	M16	M20
D7	21	22	28	33	47	55	75	85	110
D8	53	62	76	95	92	114	142	160	176
D9	4xM4xL7	4xM5xL8	4xM5xL8	6xM6xL10	6xM6xL10	6xM8xL12.5	6xM8xL12.5	6xM8xL12.5	6xM10xL15
D10	15.4	20.4	25.8	35.8	49.8	59.3	79.3	92.3	102.3
D11 g6	62.9	72.9	87	107	103	127	158	178	198
D12	62	72	86	106	104	128	160	180	200
D13 k6	13	16	18	22	32	40	50	55	60
D14 h7	63	73	88	108	135	165	205	235	275
D16	M4	M5	M5	M8	M12	M16	M16	M16	M20
L1	65	75	90	110	140	170	210	240	280
L2	19.5	30	35	40	50	60	75	85	110
L3	13	14.5	15	15	15	15	20	25	25
L4	2	2	2	2	2	2	2	2	2
L5	16	25	28	32	45	50	70	80	100
L6	2	2.5	3.5	4	2.5	5	2.5	2.5	5
L7	47.5	54	62	72	87	102	127	147	167
L8	67	84	97	112	137	162	202	232	277
L9	4.5	4.8	4.8	7.2	10	12	12	12	15
L10	10	12.5	12.5	19	28	36	36	36	42
L11	27	30	36	44	55	67	85	95	110
L12	19.5	30	35	40	50	60	75	85	110
L13	13	15	15	15	15	15	20	25	25
L14	2	2	2	2	2	2	2	2	2
L15	16	25	28	32	45	50	70	80	100
L16	2	2.5	3.5	4	2.5	5	2.5	2.5	5
L17	6	8	8	8	10	10	10	10	10
L18	43	52.5	55	60	60	70	90	105	120
L19	4.5	4.8	4.8	7.2	10	12	12	12	15
L20	10	12.5	12.5	19	28	36	36	36	42
L21	75.5	90	100	115	130	155	195	225	260
L22	95	120	135	155	180	215	270	310	370
B1 h9	5	5	6	6	10	12	14	16	18
B2 h9	5	5	6	6	10	12	14	16	18
H1	15	18	20.5	24.5	35	43	53.5	59	64
H2	15	18	20.5	24.5	35	43	53.5	59	64

ATF Input Flange Series
Product Specification

Performance of Reducer

Specification		Stages	Ratio	AT065 FL AT065 FL1 AT065 FH AT065 FC AT065 FR1	AT075 FL AT075 FL1 AT075 FH AT075 FC AT075 FR1	AT090 FL AT090 FL1 AT090 FH AT090 FC AT090 FR1	AT110 FL AT110 FL1 AT110 FH AT110 FC AT110 FR1	AT140 FL AT140 FL1 AT140 FH AT140 FC AT140 FR1	AT170 FL AT170 FL1 AT170 FH AT170 FC AT170 FR1	AT210 FL AT210 FL1 AT210 FH AT210 FC AT210 FR1	AT240 FL AT240 FL1 AT240 FH AT240 FC AT240 FR1	AT280 FL AT280 FL1 AT280 FH AT280 FC AT280 FR1
Rated Output Torque / T_{2N}	Nm	1	1	25	45	78	150	360	585	1,300	2,150	3,200
			1.5	25	45	78	150	360	585	1,300	2,150	3,200
			2	24	42	68	150	330	544	1,220	2,010	3,050
			3	18	33	54	120	270	450	1,020	1,650	2,850
			4	13	28	48	100	224	376	860	1,410	2,300
			5	12	25	40	85	196	320	740	1,210	2,000
		2	7	12	12	33	91	91	91	195	358	358
			10	24	28	68	150	208	208	430	846	846
			15	18	33	54	120	270	312	645	1,269	1,269
			20	13	28	48	100	224	376	860	1,410	1,692
			25	12	25	40	85	196	320	740	1,210	2,000
			35	12	25	40	85	196	320	740	1,210	1,790
			50	12	25	40	85	196	320	740	1,210	1,465
		3	75	-	-	-	120	210	312	585	1,269	1,269
			100	-	-	-	100	224	376	780	1,410	1,692
			125	-	-	-	85	196	320	740	1,210	2,000
			150	-	-	-	120	135	312	390	975	975
			200	-	-	-	100	180	376	520	1,300	1,300
			250	-	-	-	85	196	320	650	1,210	1,625
			350	-	-	-	85	196	320	740	1,210	1,790
			500	-	-	-	85	196	320	740	1,210	1,465
Max.acceleration torqueb / T_{2B}	Nm	1,2,3	1~500	1.5 Times of Rated Output Torque								
Max.acceleration input speed / n_{1B}	rpm	1	1~5	7,500	6,500	5,500	4,500	3,500	3,000	2,200	2,000	1,700
		2	7~50	8,000	8,000	6,000	6,000	6,000	6,000	4,800	3,600	3,600
		3	75~500	-	-	-	8,000	8,000	6,000	6,000	6,000	6,000
Backlash	arcmin	1	1~5	≤6	≤6	≤6	≤6	≤6	≤6	≤6	≤6	≤6
		2	7~50	≤8	≤8	≤8	≤8	≤8	≤8	≤8	≤8	≤8
		3	75~500	-	-	-	≤10	≤10	≤10	≤10	≤10	≤10
Allowable Radial Force / F_{1rB}[2] Output Shaft d2	N	1,2,3	1~500	900	1,100	1,700	2,700	4,800	6,600	11,500	16,000	18,000
Allowable Radial Force / F_{2rB}[3] Output Shaft d2	N	1,2,3	1~500	450	550	850	1,350	2,400	3,300	5,750	8,500	9,000
Service Life	hr	1,2,3	1~500	20,000*								
Efficiency / η	%	1	1~5	≥98%								
		2,3	7~500	≥94%								
Operating Temp	°C	1,2,3	1~500	-10°C ~ 90°C								
Lubrication				Fully Synthetic Grease								
Noise Level(n1=1500rpm, No load)	dB (A)	1,2,3	1~500	≤71	≤72	≤76	≤77	≤78	≤79	≤81	≤83	≤84

1. Ratio (i=N_{in}/N_{out})
* Continuous operation will reduce service life by half

2. Act on the center of the input shaft @n_{1B}
* Backlash value is measured at 2% of rated torque T_{2N}

ATF Input Flange Series
Product Specification

Rotary Inertia of Reducer

Specification		Stage	Ratio	AT065 FL AT065 FL1 AT065 FH AT065 FC AT065 FR1	AT075 FL AT075 FL1 AT075 FH AT075 FC AT075 FR1	AT090 FL AT090 FL1 AT090 FH AT090 FC AT090 FR1	AT110 FL AT110 FL1 AT110 FH AT110 FC AT110 FR1	AT140 FL AT140 FL1 AT140 FH AT140 FC AT140 FR1	AT170 FL AT170 FL1 AT170 FH AT170 FC AT170 FR1	AT210 FL AT210 FL1 AT210 FH AT210 FC AT210 FR1	AT240 FL AT240 FL1 AT240 FH AT240 FC AT240 FR1	AT280 FL AT280 FL1 AT280 FH AT280 FC AT280 FR1
Rotary inertia	kg・cm²	1	1	0.51	1.30	3.14	7.62	23.54	59.09	195.96	365.38	787.63
			1.5	0.46	1.15	2.80	6.65	19.34	49.38	156.02	279.62	584.28
			2	0.44	1.10	2.68	6.23	17.72	45.44	140.80	245.78	500.26
			3	0.43	1.09	2.64	6.08	17.16	44.11	135.51	233.75	471.56
			4	0.43	1.08	2.63	6.05	17.03	43.79	134.14	230.77	464.76
			5	0.43	1.08	2.63	6.04	16.99	43.69	133.71	229.71	462.08
		2	7	0.15	0.15	0.50	2.79	2.79	2.79	9.91	29.26	29.26
			10	0.15	0.15	0.50	2.80	2.80	2.80	9.96	29.43	29.43
			15	0.15	0.15	0.50	2.80	2.80	2.80	9.96	29.43	29.43
			20	0.15	0.15	0.50	2.80	2.80	2.80	9.96	29.43	29.43
			25	0.15	0.15	0.50	2.80	2.80	2.80	9.96	29.43	29.43
			35	0.15	0.15	0.50	2.79	2.79	2.79	9.91	29.26	29.26
			50	0.15	0.15	0.50	2.79	2.79	2.79	9.89	29.20	29.20
		3	75	-	-	-	2.80	2.80	2.80	9.96	29.43	29.43
			100	-	-	-	2.80	2.80	2.80	9.96	29.43	29.43
			125	-	-	-	2.80	2.80	2.80	9.96	29.43	29.43
			150	-	-	-	2.79	2.79	2.79	9.89	29.20	29.20
			200	-	-	-	2.79	2.79	2.79	9.89	29.20	29.20
			250	-	-	-	2.79	2.79	2.79	9.89	29.20	29.20
			350	-	-	-	2.79	2.79	2.79	9.89	29.20	29.20
			500	-	-	-	2.79	2.79	2.79	9.89	29.20	29.20

Weight

Reducer model		Stage	Ratio	AT065	AT075	AT090	AT110	AT140	AT170	AT210	AT240	AT280
FL Series	kg	1	1~5	2.8	4.4	7.1	12.1	20.9	36.1	69.4	101.2	158.3
		2	7~50	3.2	4.8	8.1	14.3	24.2	38.5	74.1	112.4	171.0
		3	75~500	-	-	-	13.9	23.7	38.8	73.4	110.2	168.7
FL1 Series		1	1~5	2.7	4.3	7.1	11.9	20.3	35.5	68.3	99.6	156.0
		2	7~50	3.2	4.8	8.0	14.2	23.9	37.9	73.0	110.8	168.6
		3	75~500	-	-	-	13.8	23.4	38.2	72.3	108.6	166.4
FH Series		1	1~5	2.6	4.1	6.7	11.4	18.9	32.9	63.2	92.5	146.0
		2	7~50	3.1	4.6	7.7	13.6	22.4	35.3	67.9	103.7	158.7
		3	75~500	-	-	-	13.3	21.9	35.6	67.2	101.5	156.5
FC Series		1	1~5	2.9	4.4	7.2	11.8	20.4	35.0	66.5	96.0	151.7
		2	7~50	3.3	4.9	8.2	14.1	24.1	37.4	71.2	107.2	164.4
		3	75~500	-	-	-	13.7	23.5	37.5	70.5	105.0	162.2
FR1 Series		1	1~5	2.7	4.3	7.1	11.9	20.3	35.5	68.3	99.6	156.0
		2	7~50	3.2	4.8	8.0	14.2	23.9	37.9	73.0	110.8	168.6
		3	75~500	-	-	-	13.8	23.4	38.2	72.3	108.6	166.4

AT-FL Series

Double Output Shaft Type

Size（1-stage, ratio i=1~5）

Dimensions：

Unit:mm

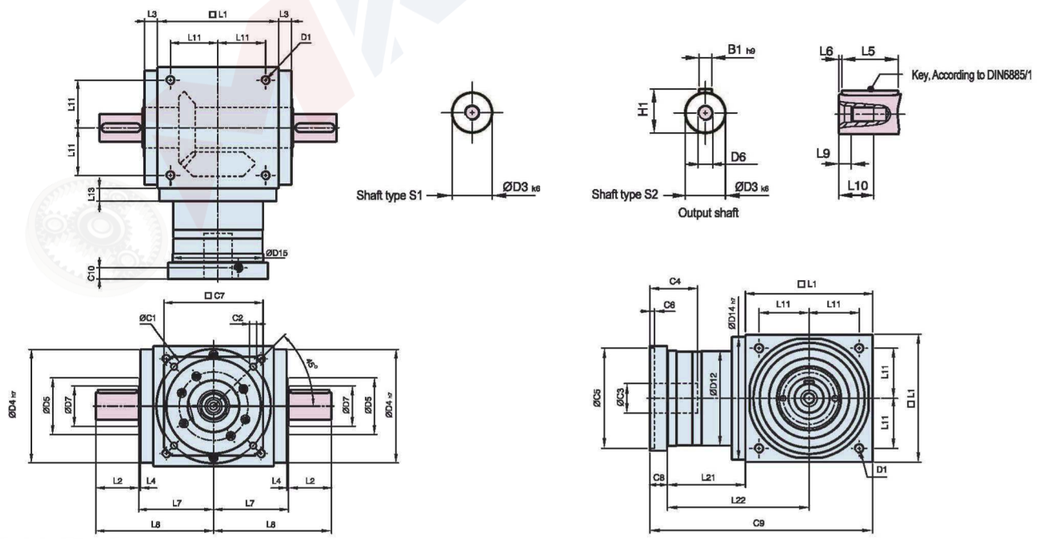

Specifications：

Unit:mm

Sizes	AT065 FL	AT075 FL	AT090 FL	AT110 FL	AT140 FL	AT170 FL	AT210 FL	AT240 FL	AT280 FL
D1	M4	M6	M6	M8	M10	M12	M16	M16	M16
D3 k6	13	16	18	22	32	40	50	55	60
D4 h7	63	73	88	108	135	165	205	235	275
D5	31	35	43	53	68	83	104	124	144
D6	M4	M5	M5	M8	M12	M16	M16	M16	M20
D7	21	22	28	33	47	55	75	85	110
D12	62	72	86	106	104	128	160	180	200
D14 h7	63	73	88	108	135	165	205	235	275
D15	62.9	72.9	87	107	105	127	158	178	198
L1	65	75	90	110	140	170	210	240	280
L2	19.5	30	35	40	50	60	75	85	110
L3	13	14.5	15	15	15	15	20	25	25
L4	2	2	2	2	2	2	2	2	2
L5	16	25	28	32	45	50	70	80	100
L6	2	2.5	3.5	4	2.5	5	2.5	2.5	5
L7	47.5	54	62	72	87	102	127	147	167
L8	67	84	97	112	137	162	202	232	277
L9	4.5	4.8	4.8	7.2	10	12	12	12	15
L10	10	12.5	12.5	19	28	36	36	36	42
L11	27	30	36	44	55	67	85	95	110
L13	13	15	15	15	15	15	20	25	25
L21	49	60.5	63	69.5	85.5	95	130	144.5	135
L22	81.5	98	108	124.5	155.5	180	235	264.5	275
C1 [3]	46	70	100	100	130	165	215	215	235
C2 [3]	M4	M5	M6	M6	M8	M10	M12	M12	M12
C3 [3]	★ ≤11 / ≤12	★ ≤14 / ≤15.875 / ≤16	≤19	≤24	≤32	≤38	≤42	≤48	≤55
C4 [3]	30	34	40	40	50	60	85	85	116
C5 [3]	30	50	80	80	110	130	180	180	200
C6 [3]	3.5	8	4	4	5	6	6	6	6
C7 [3]	42	60	90	90	115	142	190	190	220
C8 [3]	19.5	19	17	17	19.5	22.5	29	29	63
C9 [3]	133.5	154.5	170	196.5	245	287.5	369	413.5	478
C10 [3]	13.25	13.5	10.75	10.75	13	15	20.75	20.75	53.5
B1 h9	5	5	6	6	10	12	14	16	18
H1	15	18	20.5	24.5	35	43	53.5	59	64

3.C1~C10 are the connected motor dimensions of metric standard. Please click "selection and usage of reducer" on the Internet to find the correct sizes.

★ AT065 FLM1 C3 ≤12 option ★ AT075 FLM1 C3 ≤16 option ★ AT075 FLM2 C3 ≤15 875 option

AT-FL Series

Double Output Shaft Type

Size（2-stage, ratio i=7~50）

Dimensions：

Unit:mm

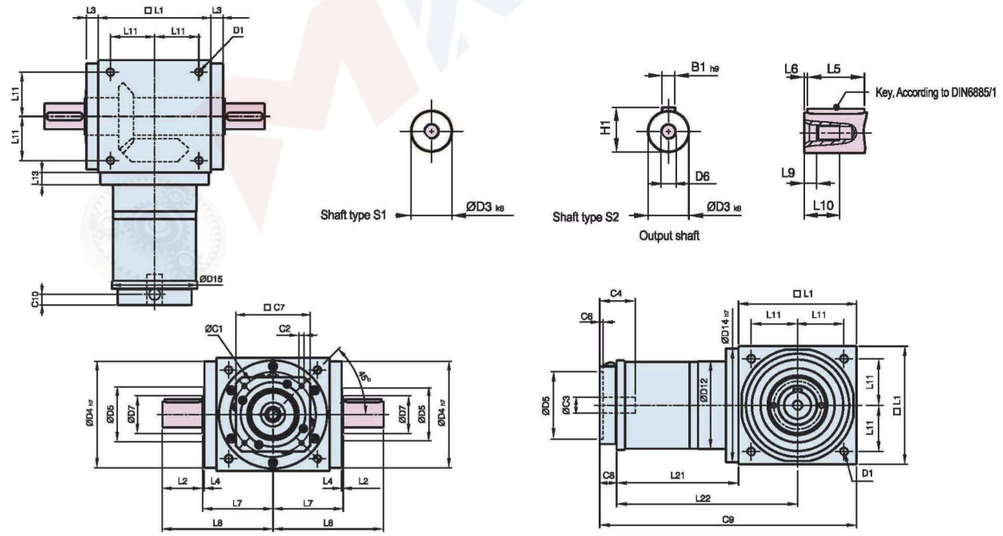

Specifications：

Unit:mm

Sizes	AT065 FL	AT075 FL	AT090 FL	AT110 FL	AT140 FL	AT170 FL	AT210 FL	AT240 FL	AT280 FL
D1	M4	M6	M6	M8	M10	M12	M16	M16	M16
D3 k6	13	16	18	22	32	40	50	55	60
D4 h7	63	73	88	108	135	165	205	235	275
D5	31	35	43	53	68	83	104	124	144
D6	M4	M5	M5	M8	M12	M16	M16	M16	M20
D7	21	22	28	33	47	55	75	85	110
D12	62	72	86	106	104	128	160	180	200
D14 h7	63	73	88	108	135	165	205	235	275
D15	62.9	72.9	87	107	106	127	158	178	198
L1	65	75	90	110	140	170	210	240	280
L2	19.5	30	35	40	50	60	75	85	110
L3	13	14.5	15	15	15	15	20	25	25
L4	2	2	2	2	2	2	2	2	2
L5	16	25	28	32	45	50	70	80	100
L6	2	2.5	3.5	4	2.5	5	2.5	2.5	5
L7	47.5	54	62	72	87	102	127	147	167
L8	67	84	97	112	137	162	202	232	277
L9	4.5	4.8	4.8	7.2	10	12	12	12	15
L10	10	12.5	12.5	19	28	36	36	36	42
L11	27	30	36	44	55	67	85	95	110
L13	13	15	15	15	15	15	20	25	25
L21	75	84.5	99	122	144.5	157.5	206.5	239	248
L22	107.5	122	144	177	214.5	242.5	311.5	359	388
C1 [4]	46	46	70	100	100	100	130	165	165
C2 [4]	M4	M4	M5	M6	M6	M6	M8	M10	M10
C3 [4]	≤12	≤12	≤16	≤24	≤24	≤24	≤32	≤38	≤38
C4 [4]	30	30	34	40	40	40	50	60	60
C5 [4]	30	30	50	80	80	80	110	130	130
C6 [4]	3.5	3.5	8	4	4	4	5	6	6
C7 [4]	42	42	60	92	92	92	115	142	142
C8 [4]	21.5	21.5	21.5	20	20	20	24	31	31
C9 [4]	161.5	181	210.5	252	304.5	347.5	440.5	510	559
C10 [4]	14.5	14.5	15.5	13	13	13	16	21	21
B1 h9	5	5	6	6	10	12	14	16	18
H1	15	18	20.5	24.5	35	43	53.5	59	64

4.C1~C10 are the connected motor dimensions of metric standard. Please click "selection and usage of reducer" on the Internet to find the correct sizes.

AT-FL Series

Double Output Shaft Type

Size（3-stage, ratio i=75~500）

Dimensions：

Unit:mm

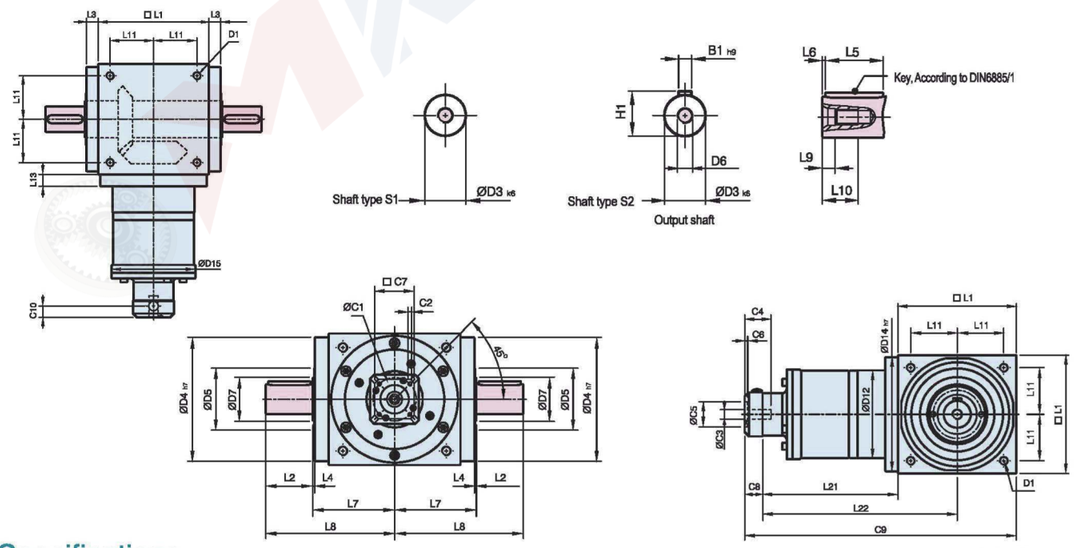

Specifications：

Unit:mm

Sizes	AT110 FL	AT140 FL	AT170 FL	AT210 FL	AT240 FL	AT280 FL
D1	M8	M10	M12	M16	M16	M16
D3 k6	22	32	40	50	55	60
D4 h7	108	135	165	205	235	275
D5	53	68	83	104	124	144
D6	M8	M12	M16	M16	M16	M20
D7	33	47	55	75	85	110
D12	106	104	128	160	180	200
D14 h7	108	135	165	205	235	275
D15	107	106	127	158	178	198
L1	110	140	170	210	240	280
L2	40	50	60	75	85	110
L3	15	15	15	20	25	25
L4	2	2	2	2	2	2
L5	32	45	50	70	80	100
L6	4	2.5	5	2.5	2.5	5
L7	72	87	102	127	147	167
L8	112	137	162	202	232	277
L9	7.2	10	12	12	12	15
L10	19	28	36	36	36	42
L11	44	55	67	85	95	110
L13	15	15	15	20	25	25
L21	136.5	159.5	183.5	226	269	278
L22	191.5	229.5	268.5	331	389	418
C1 5	46	46	70	70	100	100
C2 5	M4	M4	M5	M5	M6	M6
C3 5	≤12	≤12	≤16	≤16	≤24	≤24
C4 5	30	30	34	34	40	40
C5 5	30	30	50	50	80	80
C6 5	3.5	3.5	8	8	4	4
C7 5	42	42	60	60	92	92
C8 5	21.5	21.5	21.5	21.5	20	20
C9 5	268	321	375	457.5	529	578
C10 5	14.5	14.5	15.5	15.5	13	13
B1 h9	6	10	12	14	16	18
H1	24.5	35	43	53.5	59	64

5.C1~C10 are the connected motor dimensions of metric standard. Please click "selection and usage of reducer" on the Internet to find the correct sizes.

AT-FL1 / AT-FR1 Series

Single Output Shaft Type

Size（1-stage, ratio i=1~5）

Dimensions：

Unit:mm

AT-FL1

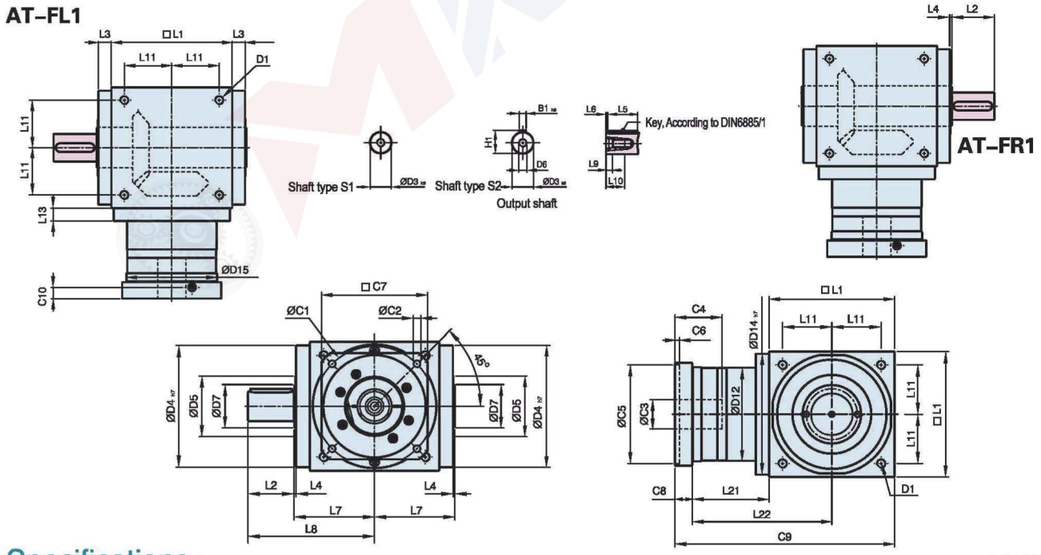

Specifications：

Unit:mm

Sizes	AT065 FL1/FR1	AT075 FL1/FR1	AT090 FL1/FR1	AT110 FL1/FR1	AT140 FL1/FR1	AT170 FL1/FR1	AT210 FL1/FR1	AT240 FL1/FR1	AT280 FL1/FR1
D1	M4	M6	M6	M8	M10	M12	M16	M16	M16
D3 k6	13	16	18	22	32	40	50	55	60
D4 h7	63	73	88	108	135	165	205	235	275
D5	31	35	43	53	68	83	104	124	144
D6	M4	M5	M5	M8	M12	M16	M16	M16	M20
D7	21	22	28	33	47	55	75	85	110
D12	62	72	86	106	104	128	160	180	200
D14 h7	63	73	88	108	135	165	205	235	275
D15	62.9	72.9	87	107	105	127	158	178	198
L1	65	75	90	110	140	170	210	240	280
L2	19.5	30	35	40	50	60	75	85	110
L3	13	14.5	15	15	15	15	20	25	25
L4	2	2	2	2	2	2	2	2	2
L5	16	25	28	32	45	50	70	80	100
L6	2	2.5	3.5	4	2.5	5	2.5	2.5	5
L7	47.5	54	62	72	87	102	127	147	167
L8	67	84	97	112	137	162	202	232	277
L9	4.5	4.8	4.8	7.2	10	12	12	12	15
L10	10	12.5	12.5	19	28	36	36	36	42
L11	27	30	36	44	55	67	85	95	110
L13	13	15	15	15	15	15	20	25	25
L21	49	60.5	63	69.5	85.5	95	130	144.5	135
L22	81.5	98	108	124.5	155.5	180	235	264.5	275
C1 6	46	70	100	100	130	165	215	215	235
C2 6	M4	M5	M6	M6	M8	M10	M12	M12	M12
C3 6	★≤11 / ≤12	★≤14 / ≤15.875 / ≤16	≤19	≤24	≤32	≤38	≤42	≤48	≤55
C4 6	30	34	40	40	50	60	85	85	116
C5 6	30	50	80	80	110	130	180	180	200
C6 6	3.5	8	4	4	5	6	6	6	6
C7 6	42	60	90	90	115	142	190	190	220
C8 6	19.5	19	17	17	19.5	22.5	29	29	63
C9 6	133.5	154.5	170	196.5	245	287.5	369	413.5	478
C10 6	13.25	13.5	10.75	10.75	13	15	20.75	20.75	53.5
B1 h9	5	5	6	6	10	12	14	16	18
H1	15	18	20.5	24.5	35	43	53.5	59	64

6.C1~C10 are the connected motor dimensions of metric standard. Please click "selection and usage of reducer" on the Internet to find the correct sizes.

★AT065 FLM1 C3 ≤12 option ★AT075 FLM1 C3 ≤16 option ★AT075 FLM2 C3 ≤15 875 option

AT-FL1 / AT-FR1 Series

Single Output Shaft Type

Size（2-stage, ratio i=7~50）

Dimensions：

Unit:mm

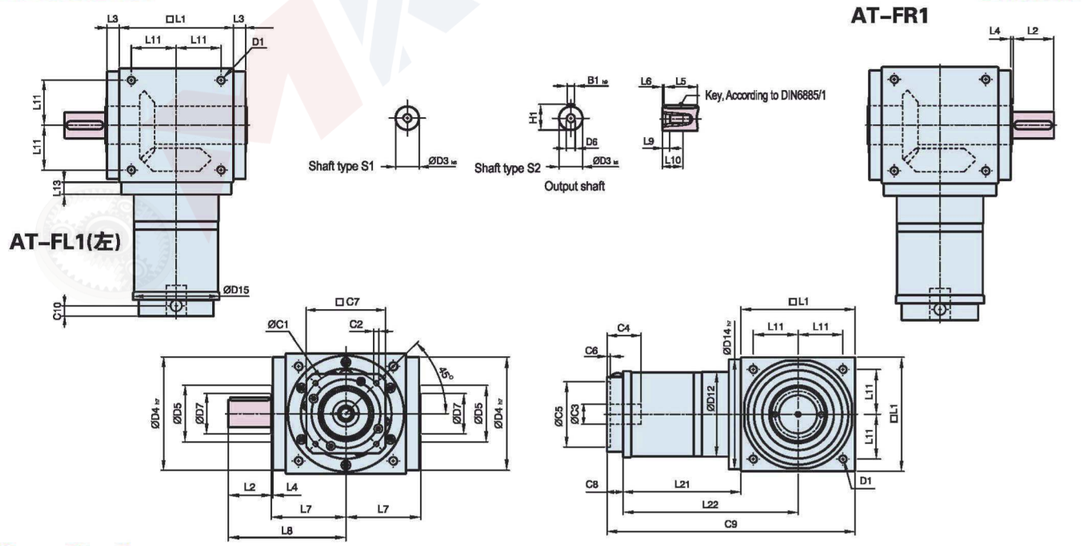

Specifications：

Unit:mm

Sizes	AT065 FL1/FR1	AT075 FL1/FR1	AT090 FL1/FR1	AT110 FL1/FR1	AT140 FL1/FR1	AT170 FL1/FR1	AT210 FL1/FR1	AT240 FL1/FR1	AT280 FL1/FR1
D1	M4	M6	M6	M8	M10	M12	M16	M16	M16
D3 k6	13	16	18	22	32	40	50	55	60
D4 h7	63	73	88	108	135	165	205	235	275
D5	31	35	43	53	68	83	104	124	144
D6	M4	M5	M5	M8	M12	M16	M16	M16	M20
D7	21	22	28	33	47	55	75	85	110
D12	62	72	86	106	104	128	160	180	200
D14 h7	63	73	88	108	135	165	205	235	275
D15	62.9	72.9	87	107	106	127	158	178	198
L1	65	75	90	110	140	170	210	240	280
L2	19.5	30	35	40	50	60	75	85	110
L3	13	14.5	15	15	15	15	20	25	25
L4	2	2	2	2	2	2	2	2	2
L5	16	25	28	32	45	50	70	80	100
L6	2	2.5	3.5	4	2.5	5	2.5	2.5	5
L7	47.5	54	62	72	87	102	127	147	167
L8	67	84	97	112	137	162	202	232	277
L9	4.5	4.8	4.8	7.2	10	12	12	12	15
L10	10	12.5	12.5	19	28	36	36	36	42
L11	27	30	36	44	55	67	85	95	110
L13	13	15	15	15	15	15	20	25	25
L21	75	84.5	99	122	144.5	157.5	206.5	239	248
L22	107.5	122	144	177	214.5	242.5	311.5	359	388
C1 7	46	46	70	100	100	100	130	165	165
C2 7	M4	M4	M5	M6	M6	M6	M8	M10	M10
C3 7	≤12	≤12	≤16	≤24	≤24	≤24	≤32	≤38	≤38
C4 7	30	30	34	40	40	40	50	60	60
C5 7	30	30	50	80	80	80	110	130	130
C6 7	3.5	3.5	8	4	4	4	5	6	6
C7 7	42	42	60	92	92	92	115	142	142
C8 7	21.5	21.5	21.5	20	20	20	24	31	31
C9 7	161.5	181	210.5	252	304.5	347.5	440.5	510	559
C10 7	14.55	14.5	15.5	13	13	13	16	21	21
B1 h9	5	5	6	6	10	12	14	16	18
H1	15	18	20.5	24.5	35	43	53.5	59	64

7.C1~C10 are the connected motor dimensions of metric standard. Please click "selection and usage of reducer" on the Internet to find the correct sizes.

AT-FL1 / AT-FR1 Series

Single Output Shaft Type

Size（3-stage, ratio i=75~500）

Dimensions：

Unit:mm

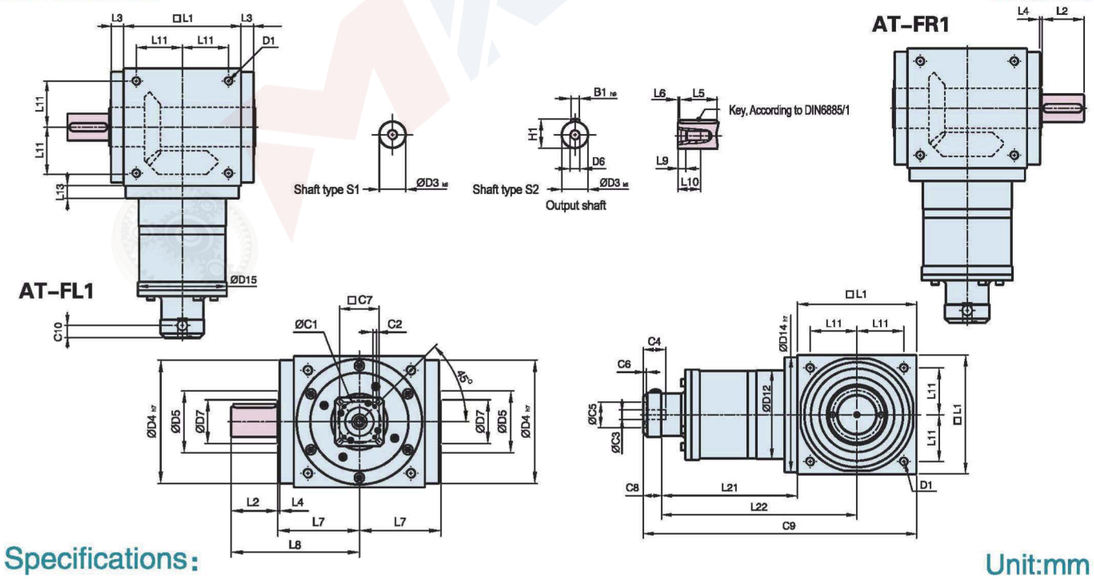

Specifications：

Unit:mm

Sizes	AT110 FL1/FR1	AT140 FL1/FR1	AT170 FL1/FR1	AT210 FL1/FR1	AT240 FL1/FR1	AT280 FL1/FR1
D1	M8	M10	M12	M16	M16	M16
D3 k6	22	32	40	50	55	60
D4 h7	108	135	165	205	235	275
D5	53	68	83	104	124	144
D6	M8	M12	M16	M16	M16	M20
D7	33	47	55	75	85	110
D12	106	104	128	160	180	200
D14 h7	108	135	165	205	235	275
D15	107	106	127	158	178	198
L1	110	140	170	210	240	280
L2	40	50	60	75	85	110
L3	15	15	15	20	25	25
L4	2	2	2	2	2	2
L5	32	45	50	70	80	100
L6	4	2.5	5	2.5	2.5	5
L7	72	87	102	127	147	167
L8	112	137	162	202	232	277
L9	7.2	10	12	12	12	15
L10	19	28	36	36	36	42
L11	44	55	67	85	95	110
L13	15	15	15	20	25	25
L21	136.5	159.5	183.5	226	269	278
L22	191.5	229.5	268.5	331	389	418
C1 8	46	46	70	70	100	100
C2 8	M4	M4	M5	M5	M6	M6
C3 8	≤12	≤12	≤16	≤16	≤24	≤24
C4 8	30	30	34	34	40	40
C5 8	30	30	50	50	80	80
C6 8	3.5	3.5	8	8	4	4
C7 8	42	42	60	60	92	92
C8 8	21.5	21.5	21.5	21.5	20	20
C9 8	268	321	375	457.5	529	578
C10 8	14.5	14.5	15.5	15.5	13	13
B1 h9	6	10	12	14	16	18
H1	24.5	35	43	53.5	59	64

8.C1~C10 are the connected motor dimensions of metric standard. Please click "selection and usage of reducer" on the Internet to find the correct sizes.

AT-FH Series

Hole Output Type

Size（1-stage, ratio i=1~5）

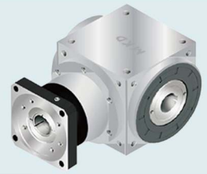

Dimensions：

Unit:mm

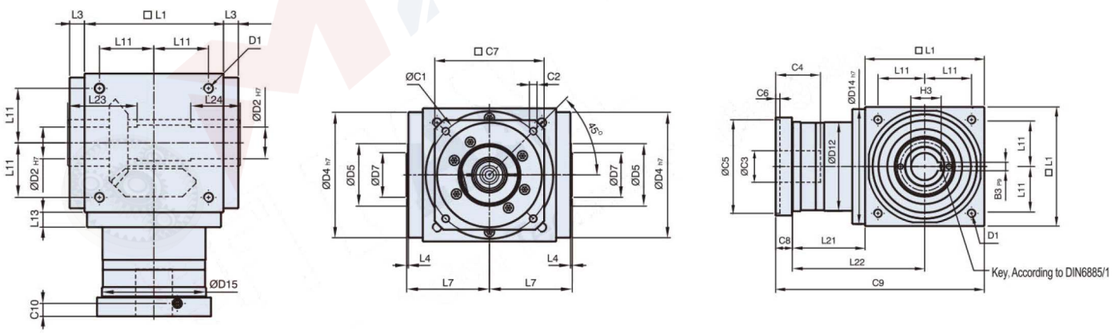

Specifications：

Unit:mm

Sizes	AT065FH	AT075FH	AT090FH	AT110FH	AT140FH	AT170FH	AT210FH	AT240FH	AT280FH
D1	M4	M6	M6	M8	M10	M12	M16	M16	M16
D2 H7	13	14	18	22	32	40	50	55	60
D4 h7	63	73	88	108	135	165	205	235	275
D5	31	35	43	53	68	83	104	124	144
D7	21	22	28	33	47	55	75	85	110
D12	62	72	86	106	104	128	160	180	200
D14 h7	63	73	88	108	135	165	205	235	275
D15	62.9	72.9	87	107	105	127	158	178	198
L1	65	75	90	110	140	170	210	240	280
L3	13	14.5	15	15	15	15	20	25	25
L4	2	2	2	2	2	2	2	2	2
L7	47.5	54	62	72	87	102	127	147	167
L11	27	30	36	44	55	67	85	95	110
L13	13	15	15	15	15	15	20	25	25
L21	49	60.5	63	69.5	85.5	95	130	144.5	135
L22	81.5	98	108	24.5	155.5	180	235	264.5	275
L23	40	47	52	53	70	80	95	115	115
L24	30	32	35	35	50	55	65	80	80
C1 [9]	46	70	100	100	130	165	215	215	235
C2 [9]	M4	M5	M6	M6	M8	M10	M12	M12	M12
C3 [9]	★ ≤11 / ≤12	★ ≤14 / ≤15.875 / ≤16	≤19	≤24	≤32	≤38	≤42	≤48	≤55
C4 [9]	30	34	40	40	50	60	85	85	116
C5 [9]	30	50	80	80	110	130	180	180	200
C6 [9]	3.5	8	4	4	5	6	6	6	6
C7 [9]	42	60	90	90	115	142	190	190	220
C8 [9]	19.5	19	17	17	19.5	22.5	29	29	63
C9 [9]	133.5	154.5	170	196.5	245	287.5	369	413.5	478
C10 [9]	13.25	13.5	10.75	10.75	13	15	20.75	20.75	53.5
B3 P9	5	5	6	6	10	12	14	16	18
H3	15.3	16.3	20.8	24.8	35.3	43.3	53.8	59.3	64.4

9.C1~C10 are the connected motor dimensions of metric standard. Please click "selection and usage of reducer" on the Internet to find the correct sizes.

★ AT065 FLM1 C3 ≤12 option ★ AT075 FLM1 C3 ≤16 option ★ AT075 FLM2 C3 ≤15 875 option

AT-FH Series

Hole Output Type

Size（2-stage, ratio i=7~50）

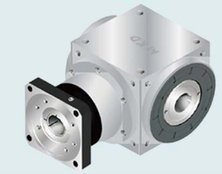

Dimensions：

Unit:mm

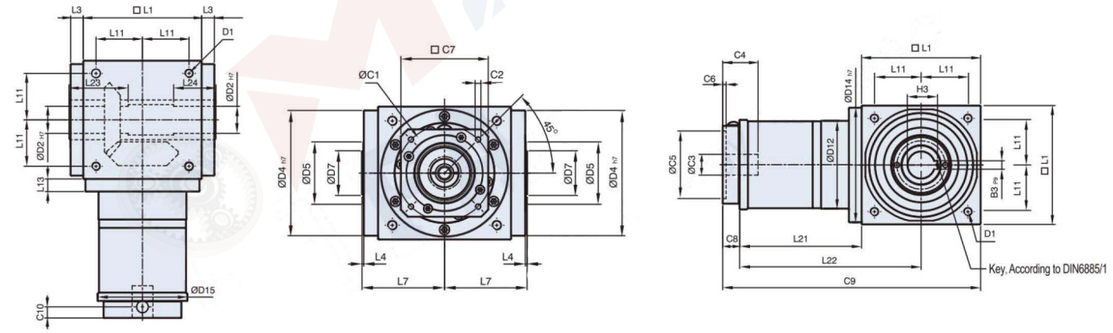

Specifications：

Unit:mm

Sizes	AT065FH	AT075FH	AT090FH	AT110FH	AT140FH	AT170FH	AT210FH	AT240FH	AT280FH
D1	M4	M6	M6	M8	M10	M12	M16	M16	M16
D2 H7	13	14	18	22	32	40	50	55	60
D4 h7	63	73	88	108	135	165	205	235	275
D5	31	35	43	53	68	83	104	124	144
D7	21	22	28	33	47	55	75	85	110
D12	62	72	86	106	104	128	160	180	200
D14 h7	63	73	88	108	135	165	205	235	275
D15	62.9	72.9	87	107	106	127	158	178	198
L1	65	75	90	110	140	170	210	240	280
L3	13	14.5	15	15	15	15	20	25	25
L4	2	2	2	2	2	2	2	2	2
L7	47.5	54	62	72	87	102	127	147	167
L11	27	30	36	44	55	67	85	95	110
L13	13	15	15	15	15	15	20	25	25
L21	75	84.5	99	122	144.5	157.5	206.5	239	248
L22	107.5	122	144	177	214.5	242.5	311.5	359	388
L23	40	47	52	53	70	80	95	115	115
L24	30	32	35	35	50	55	65	80	80
C1 [10]	46	46	70	100	100	100	130	165	165
C2 [10]	M4	M4	M5	M6	M6	M6	M8	M10	M10
C3 [10]	≤12	≤12	≤16	≤24	≤24	≤24	≤32	≤38	≤38
C4 [10]	30	30	34	40	40	40	50	60	60
C5 [10]	30	30	50	80	80	80	110	130	130
C6 [10]	3.5	3.5	8	4	4	4	5	6	6
C7 [10]	42	42	60	92	92	92	115	142	142
C8 [10]	21.5	21.5	21.5	20	20	20	24	31	31
C9 [10]	161.5	181	210.5	252	304.5	347.5	440.5	510	559
C10 [10]	14.5	14.5	15.5	13	13	13	16	21	21
B3 P9	5	5	6	6	10	12	14	16	18
H3	15.3	16.3	20.8	24.8	35.3	43.3	53.8	59.3	64.4

10.C1~C10 are the connected motor dimensions of metric standard. Please click "selection and usage of reducer" on the Internet to find the correct sizes.

AT-FH Series

Hole Output Type

Size（3-stage, ratio i=75~500）

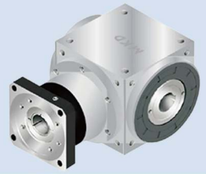

Dimensions:

Unit:mm

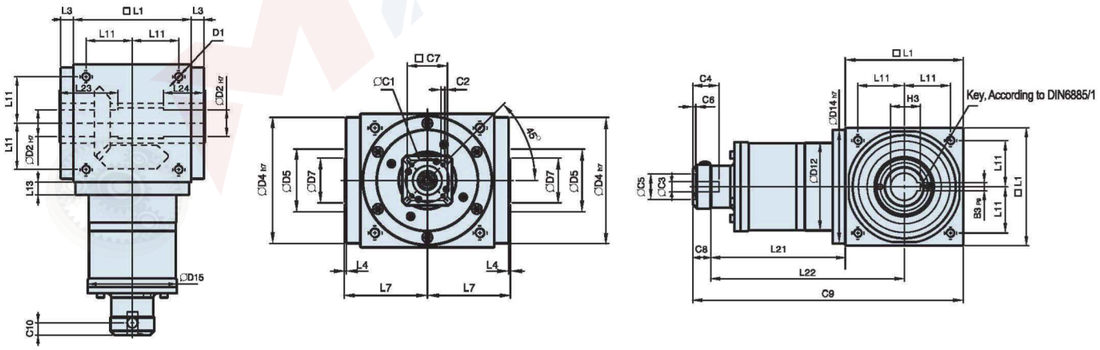

Specifications:

Unit:mm

Sizes	AT110FH	AT140FH	AT170FH	AT210FH	AT240FH	AT280FH
D1	M8	M10	M12	M16	M16	M16
D2 H7	22	32	40	50	55	60
D4 h7	108	135	165	205	235	275
D5	53	68	83	104	124	144
D7	33	47	55	75	85	110
D12	106	104	128	160	180	200
D14 h7	108	135	165	205	235	275
D15	107	106	127	158	178	198
L1	110	140	170	210	240	280
L3	15	15	15	20	25	25
L4	2	2	2	2	2	2
L7	72	87	102	127	147	167
L11	44	55	67	85	95	110
L13	15	15	15	20	25	25
L21	136.5	159.5	183.5	226	269	278
L22	191.5	229.5	268.5	331	389	418
L23	53	70	80	95	115	115
L24	35	50	55	65	80	80
C1 [11]	46	46	70	70	100	100
C2 [11]	M4	M4	M5	M5	M6	M6
C3 [11]	≤12	≤12	≤16	≤16	≤24	≤24
C4 [11]	30	30	34	34	40	40
C5 [11]	30	30	50	50	80	80
C6 [11]	3.5	3.5	8	8	4	4
C7 [11]	42	42	60	60	92	92
C8 [11]	21.5	21.5	21.5	21.5	20	20
C9 [11]	268	321	375	457.5	529	578
C10 [11]	14.5	14.5	15.5	15.5	13	13
B3 P9	6	10	12	14	16	18
H3	24.8	35.3	43.3	53.8	59.3	64.4

11.C1~C10 are the connected motor dimensions of metric standard. Please click "selection and usage of reducer" on the Internet to find the correct sizes.

AT-FC Series

Hole Output Hoop Type

Size（1-stage, ratio i=1~5）

Dimensions:

Unit:mm

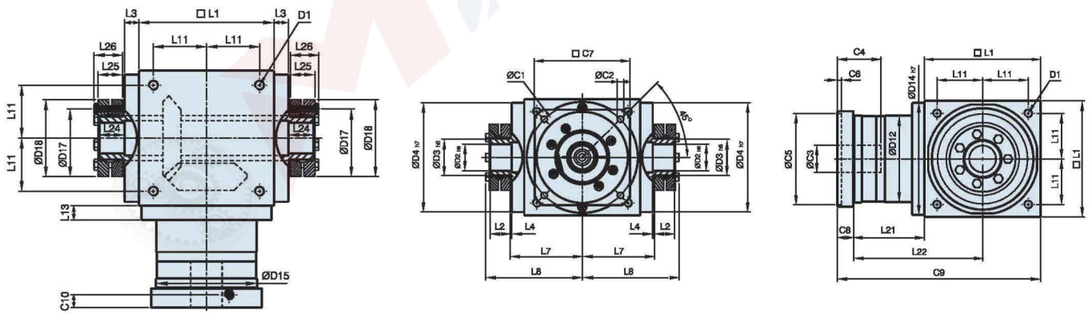

● Standard accessories include two shrink discs

Specifications:

Unit:mm

Sizes	AT065FC	AT075FC	AT090FC	AT110FC	AT140FC	AT170FC	AT210FC	AT240FC	AT280FC
D1	M4	M6	M6	M8	M10	M12	M16	M16	M16
D2 H8	13	14	18	22	32	40	50	55	60
D3 h8	16	16	22	25	44	50	62	68	75
D4 h7	63	73	88	108	135	165	205	235	275
D12	62	72	86	106	104	128	160	180	200
D14 h7	63	73	88	108	135	165	205	235	275
D15	62.9	72.9	87	107	105	130	158	178	198
D17	26	26	36	38	61	70	86	86	100
D18	41	41	50	50	80	90	110	115	138
L1	65	75	90	110	140	170	210	240	280
L2	14	14	18	18	24	26	29	29	30.5
L3	13	14.5	15	15	15	15	20	25	25
L4	2	2	2	2	2	2	2	2	2
L7	47.5	54	62	72	87	102	127	147	167
L8	66	72.5	85	95	116.5	113.5	161.5	181.5	205
L11	27	30	36	44	55	67	85	95	110
L13	13	15	15	15	15	15	20	25	25
L21	49	60.5	63	69.5	85.5	95	130	144.5	135
L22	81.5	98	108	124.5	155.5	180	235	264.5	275
L23	15	15	20	20	26	28	31	31	32.5
L24	15	15	20	20	26	28	31	31	32.5
L25	15	15	19.5	19.5	25.5	27.5	30.5	30.5	32.5
L26	18.5	18.5	23	23	29.5	31.5	34.5	34.5	38
C1 [12]	46	70	100	100	130	165	215	215	235
C2 [12]	M4	M5	M6	M6	M8	M10	M12	M12	M12
C3 [12]	★ ≤11 / ≤12	★ ≤14 / ≤15.875 / ≤16	≤19	≤24	≤32	≤38	≤42	≤48	≤55
C4 [12]	30	34	40	40	50	60	85	85	116
C5 [12]	30	50	80	80	110	130	180	180	200
C6 [12]	3.5	8	4	4	5	6	6	6	6
C7 [12]	42	60	90	90	115	142	190	190	220
C8 [12]	19.5	19	17	17	19.5	22.5	29	29	63
C9 [12]	133.5	154.5	170	196.5	245	287.5	369	413.5	478
C10 [12]	13.25	13.5	10.75	10.75	13	15	20.75	20.75	53.5

12.C1~C10 are the connected motor dimensions of metric standard. Please click "selection and usage of reducer" on the Internet to find the correct sizes.

★ AT065 FLM1 C3 ≤12 option ★ AT075 FLM1 C3 ≤16 option ★ AT075 FLM2 C3 ≤15 875 option

AT-FC Series

Hole Output Hoop Type

Size（2-stage, ratio i=7~50）

Dimensions：

Unit:mm

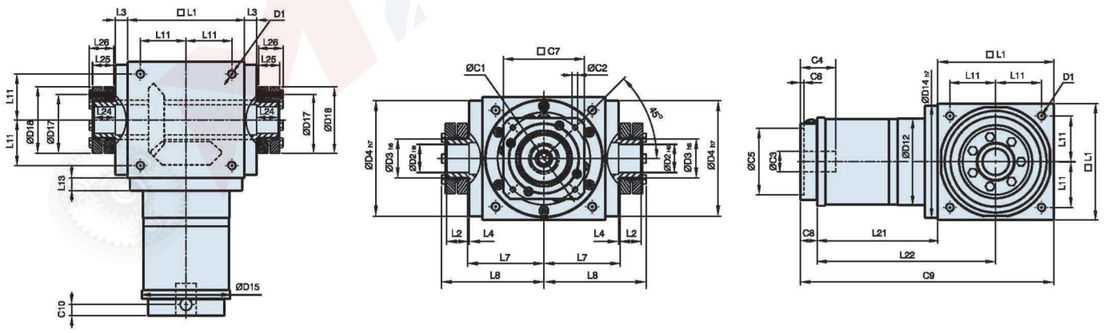

● Standard accessories include two shrink discs

Specifications：

Unit:mm

Sizes	AT065FC	AT075FC	AT090FC	AT110FC	AT140FC	AT170FC	AT210FC	AT240FC	AT280FC
D1	M4	M6	M6	M8	M10	M12	M16	M16	M16
D2 H6	13	14	18	22	32	40	50	55	60
D3 h8	16	16	22	25	44	50	62	68	75
D4 h7	63	73	88	108	135	165	205	235	275
D12	62	72	86	106	104	128	160	180	200
D14 h7	63	73	88	108	135	165	205	235	275
D15	62.9	72.9	87	107	106	127	158	178	198
D17	26	26	36	38	61	70	86	86	100
D18	41	41	50	50	80	90	110	115	138
L1	65	75	90	110	140	170	210	240	280
L2	14	14	18	18	24	26	29	29	30.5
L3	13	14.5	15	15	15	15	20	25	25
L4	2	2	2	2	2	2	2	2	2
L7	47.5	54	62	72	87	102	127	147	167
L8	66	72.5	85	95	116.5	133.5	161.5	181.5	205
L11	27	30	36	44	55	67	85	95	110
L13	13	15	15	15	15	15	20	25	25
L21	75	84.5	99	122	144.5	157.5	206.5	239	248
L22	107.5	122	144	177	214.5	242.5	311.5	359	388
L23	15	15	20	20	26	28	31	31	32.5
L24	15	15	20	20	26	28	31	31	32.5
L25	15	15	19.5	19.5	25.5	27.5	30.5	30.5	32.5
L26	18.5	18.5	23	23	29.5	31.5	34.5	34.5	38
C1 [13]	46	46	70	100	100	100	130	165	165
C2 [13]	M4	M4	M5	M6	M6	M6	M8	M10	M10
C3 [13]	≤12	≤12	≤16	≤24	≤24	≤24	≤32	≤38	≤38
C4 [13]	30	30	34	40	40	40	50	60	60
C5 [13]	30	30	50	80	80	80	110	130	130
C6 [13]	3.5	3.5	8	4	4	4	5	6	6
C7 [13]	42	42	60	92	92	92	115	142	142
C8 [13]	21.5	21.5	21.5	20	20	20	24	31	31
C9 [13]	161.5	181	210.5	252	304.5	347.5	440.5	510	559
C10 [13]	14.5	14.5	15.5	13	13	13	16	21	21

13.C1~C10 are the connected motor dimensions of metric standard. Please click "selection and usage of reducer" on the Internet to find the correct sizes.

AT-FC Series

Hole Output Hoop Type

Size（3-stage, ratio i=75~500）

Dimensions：

Unit:mm

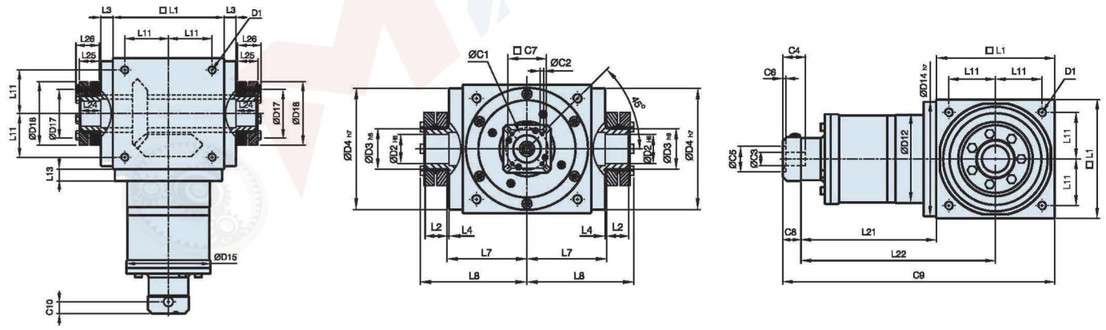

● Standard accessories include two shrink discs

Specifications：

Unit:mm

Sizes	AT110FC	AT140FC	AT170FC	AT210FC	AT240FC	AT280FC
D1	M8	M10	M12	M16	M16	M16
D2 H6	22	32	40	50	55	60
D3 h8	25	44	50	62	68	75
D4 h7	108	135	165	205	235	275
D12	106	104	128	160	180	200
D14 h7	108	135	165	205	235	275
D15	107	106	127	158	178	198
D17	38	61	70	86	86	100
D18	50	80	90	110	115	138
L1	110	140	170	210	240	280
L2	18	24	26	29	29	30.5
L3	15	15	15	20	25	25
L4	2	2	2	2	2	2
L7	72	87	102	127	147	167
L8	95	116.5	133.5	161.5	181.5	205
L11	44	55	67	85	95	110
L13	15	15	15	20	25	25
L21	136.5	159.5	183.5	226	269	278
L22	191.5	229.5	268.5	331	389	418
L23	20	26	28	31	31	32.5
L24	20	26	28	31	31	32.5
L25	19.5	25.5	27.5	30.5	30.5	32.5
L26	23	29.5	31.5	34.5	34.5	38
C1 [14]	46	46	70	70	100	100
C2 [14]	M4	M4	M5	M5	M6	M6
C3 [14]	≤12	≤12	≤16	≤16	≤24	≤24
C4 [14]	30	30	34	34	40	40
C5 [14]	30	30	50	50	80	80
C6 [14]	3.5	3.5	8	8	4	4
C7 [14]	42	42	60	60	92	92
C8 [14]	21.5	21.5	21.5	21.5	20	20
C9 [14]	268	321	375	457.5	529	578
C10 [14]	14.5	14.5	15.5	15.5	13	13

14.C1~C10 are the connected motor dimensions of metric standard. Please click "selection and usage of reducer" on the Internet to find the correct sizes.

Diagram of Rotating Direction

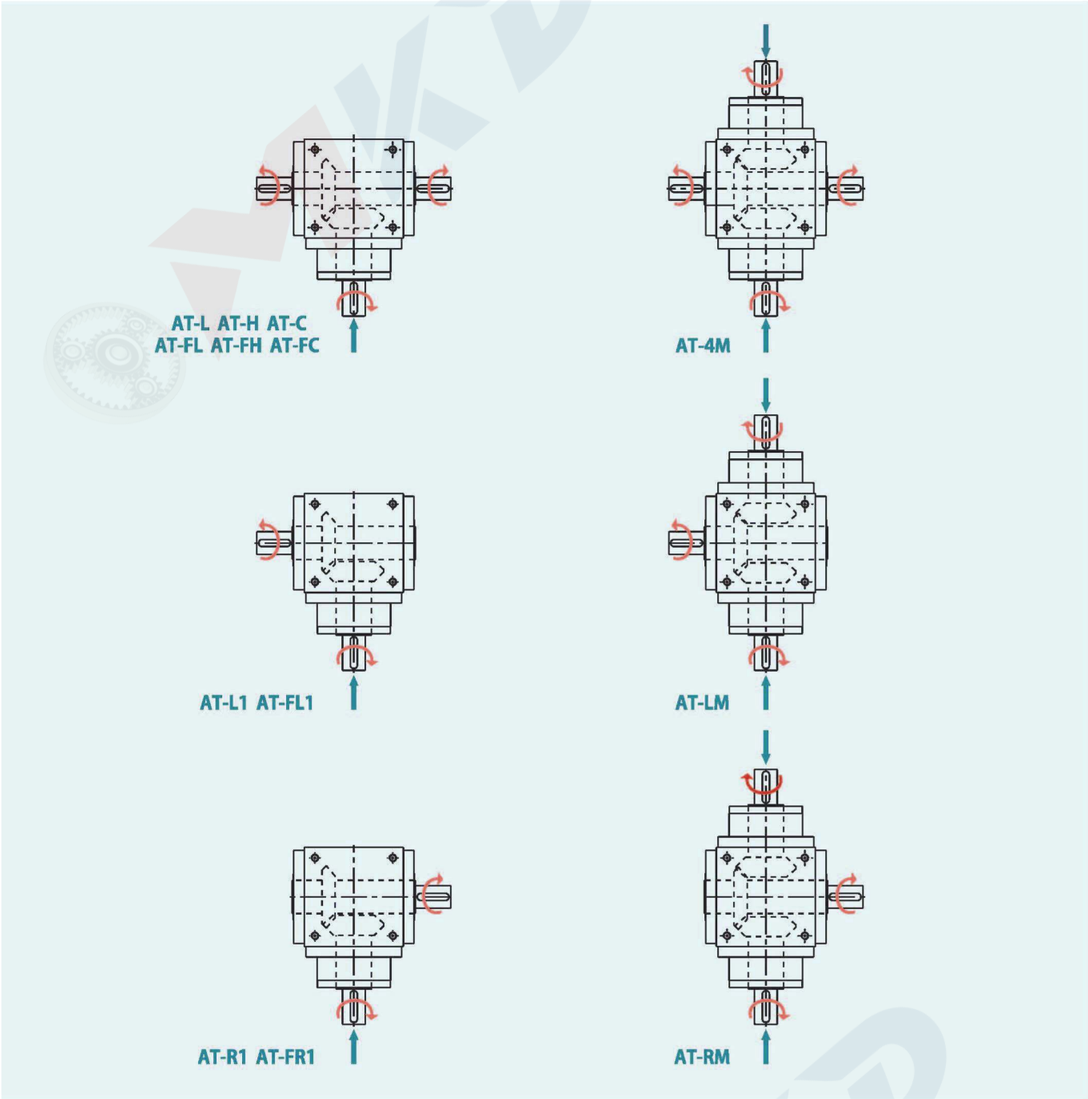

Selection of Shrink Disc Accesseries

(Unit: mm)

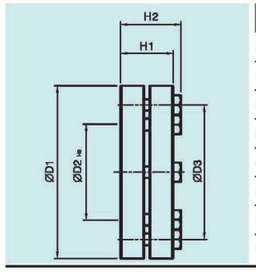

C / FC Series	D1	D2	D3	H1	H2
SSD-d16xdw14	41	16	26	15	18.5
SSD-d22xdw18	50	22	36	19.5	23
SSD-d25xdw22	50	25	38	19.5	23
SSD-d44xdw32	80	44	61	25.5	29.5
SSD-d50xdw40	90	50	70	27.5	31.5
SSD-d62xdw50	110	62	86	30.5	34.5
SSD-d68xdw55	115	68	86	30.5	34.5
SSD-d75xdw60	138	75	100	32.5	38

Suitable for multi-axis motion occasions: TFT-LCD lifting mechanism, various lifts, horizontal motion mechanism and other mechanisms

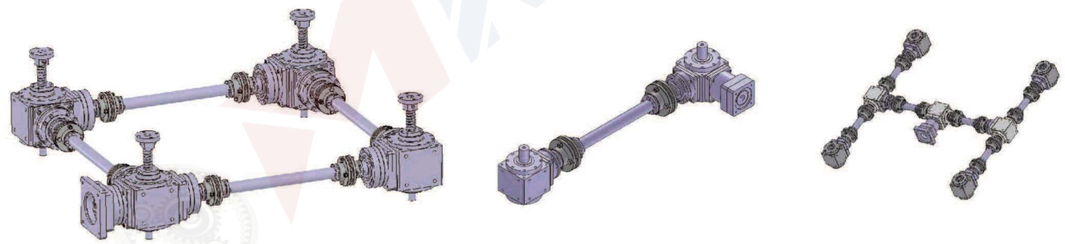

Reducer -- backlash measured value:

The input shaft is fixed, and the output shaft is applied with a small force distance (5% of the rated value). The θ° (+θ°and -θ°) measured by measuring rod from left then to right is backlash.

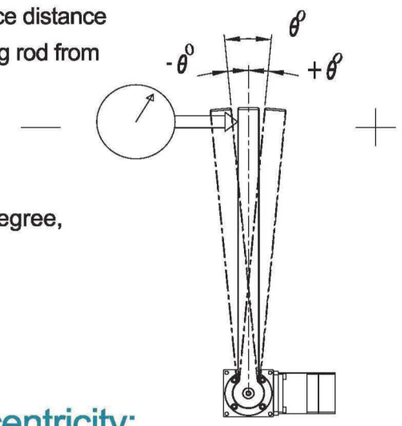

Backlash calculation:

Example: When the maximum θ° is 0.05 degree (3arcmin) in 360 degree, the radius is 500MM, and the backlash value is equal to

(500 *2 *π) / (360 *60) *3 = 0.436MM

θ° is 0.05 degrees (3arcmin) = 0.436M (backlash)

Reducer-Output Shaft Deflection and Concentricity:

1. The deflection and concentricity of output shaft have absolute influence on its life. The excessive deflection of output shaft can easily produce deflection motion, and produce wear and shorten the life of gears.
2. The whole series use NSK conical cylindrical bearings. Shaft deflection requires less than 0.01MM (5% of fixed-grid torque is applied in measurement).

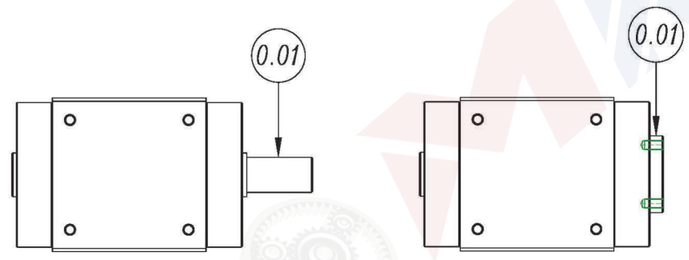

PAW–A(B)/PT Series

90 Degree Precision Speed Reducer

Multiple Output Shaft Type Reducer1:1–1:100

Applicable Servo Motor Capacity: 0.1kw–15kw

Hollow shaft + conical tightening ring: applied in heavy load situations.
Application: roller mechanism, conveying and transporting mechanism,cam mechanism, LCD panel turnover mechanism, rack and gear mechanism and other industrial institutions.

Hollow shaft rotation flange : applied in heavy load situations.
Application: rotary mechanism, Turnover mechanism of CNC lathemechanical arm

Hollow shaft (clamping type), single hollow shaft and double hollow shaft.
Application: conveying and transporting mechanism.

Hollow shaft clamping type with keyway: suitable for heavy load occasions.
Application: roller mechanism, conveying and transporting mechanism, cam mechanism, LCD panel turnover mechanism, rack and gear mechanism.

Hollow shaft with keyway: new type with socket set screws.
General conveying mechanism.

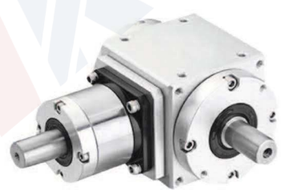

Steering gear

Model Description
PAW–A(B) Series
PAW055A~PAW180A(B)

PAW085A — L1 — 20 — 2P — S1 — B1 — Y

- **PAW085A**: PAW055A, PAW070A, PAW085A, PAW105A, PAW125A(B), PAW150A(B), PAW180A(B)
- **L1**: Stages
  - L1 (1-stage ratio)
  - L2 (2-stage ratio)
- **20**: Ratio of Reducer
  - L1 :3, 4, 5, 6, 7, 8, 10
  - L2 :12, 15, 16, 20, 25, 28, 30, 35, 40, 50, 60, 70, 80, 100
- **2P**: Output Shaft Type
  - P: Single Solid Output Shaft
  - 2P: Double Solid Output Shaft
  - CR: Hollow Shaft with Keyway
  - 2C-K: Double Hollow Shaft Clamping Type
  - C-K: Single Hollow Shaft + Keyway
- **S1**: Servo Motor Mark: S1~S11
  If no mark, please offer:
  Servo motor brand / Specs
- **B1**: Backlash Grade
  - No marks: stand for standard backlash
    L1≤10 arcmin L2≤15 arcmin
  - Precision Backlash B1
    L1≤3 arcmin L2≤5 arcmin
  - Precision Backlash B2
    L1≤5 arcmin L2≤8 arcmin
  - Special Type: B0 Ultra-precision Backlash
    (L1≤2 arcmin L2≤4 arcmin)
- **Y**: No marks:
  stand for Standard Type
  Special Marks:
  Dimensions of input and output terminals are customized according to customer's designation.

Model Description
PT Series:PT070A~PT180B

PT070A — 01 — P — L — Y

- **PT070A**: Reducer Models
  PT070A, PT085A, PT105A, PT125B, PT150B, PT180B
- **01**: Ratio 1 : 1
- **P**: Output Shaft Type
  - P: Single Solid Output Shaft
  - 2P: Double Solid Output Shaft
  - CR: Hollow Shaft with Keyway
  - 2C-K: Double Hollow Shaft Clamping Type
  - C-K: Single Hollow Shaft + Keyway
- **L**: Direction of input shaft and output shaft
  - No marks: 2C, CR
  - L: Left rotation (Input for right rotation-output for left rotation)
  - R: Right rotation (Input for right rotation-output for right rotation)
- **Y**: Special Type

PAW-A(B)/PT Series

Performance Parameters Table

Specification	Stages	Ratio	PAW055A	PAW070A PT070A	PAW085A PT085A	PAW105A PT105A	PAW125A PT125B	PAW125B	PAW150A PT150B	PAW150B	PAW180A	PAW180B PT180B
Rated Output Torque(Nm)	L1	1/1		30	40	100	230		400			600
		1/3	10	30	40	100	230	100	400	230	900	450
		1/4	15	30	50	150	250	160	500	330	1100	550
		1/5	15	30	50	150	250	160	500	330	1200	550
		1/6	14	30	42	120	230	160	500	290	1100	530
		1/7	14	30	42	120	230	160	500	290	1100	530
		1/10	10	30	40	100	230	100	400	230	900	450
	L2	1/12	10	30	40	100	230	100	400	230	900	450
		1/15	10	30	40	100	230	100	400	230	900	450
		1/16	15	30	50	150	250	160	500	330	1200	550
		1/20	15	30	50	150	250	160	500	330	1200	550
		1/25	15	30	50	150	250	160	500	330	1200	550
		1/28	15	30	50	150	250	160	500	330	1100	550
		1/30	10	30	40	100	230	100	450	330	900	450
		1/35	15	30	50	150	250	160	500	330	1100	550
		1/40	15	30	50	150	250	160	500	330	1100	550
		1/50	15	30	50	150	250	160	500	330	1100	550
		1/60	15	30	50	150	250	160	500	330	1100	550
		1/70	12	30	50	120	250	160	500	290	1100	550
		1/100	10	30	40	100	230	100	400	230	900	450
Max. Output torque (Nm)	L1,L2	3~100	3 Times of Rated Output Torque									
Input speed (rpm)	L1,L2	3~100	3000	3000	3000	3000	3000	3000	3000	3000	3000	3000
Standard Backlash (arc-min)	L1	3~10	≦10	≦10	≦10	≦10	≦10	≦10	≦10	≦10	≦10	≦10
	L2	12~100	≦15	≦15	≦15	≦15	≦15	≦15	≦15	≦15	≦15	≦15
Precision Backlash B2 (arc-min)	L1	3~10	≦5	≦5	≦5	≦5	≦5	≦5	≦5	≦5	≦5	≦5
	L2	12~100	≦8	≦8	≦8	≦8	≦8	≦8	≦8	≦8	≦8	≦8
Precision Backlash B1 (arc-min)	L1	3~10		≦3	≦3	≦3	≦3	≦3	≦3	≦3	≦3	≦3
	L2	12~100		≦5	≦5	≦5	≦5	≦5	≦5	≦5	≦5	≦5
Allowable Radial Force(N)	L1,L2	3~100	1100	3250	3250	5850	9100	9100	14300	14300	19500	19500
Allowable Axial Force(N)	L1,L2	3~100	650	3250	3250	5850	9100	9100	14300	14300	19500	19500
Efficiency (%)	L1	3~10	90%									
	L2	12~100	85%									
Weight	L1	3~10	1.8	2.9	3.8	10.5	15.5	12.5	31	25.5	56.5	37.5
	L2	12~100	2.1	3.3	4.3	11.2	17	13.2	35.5	28.5	63.5	42.0
Operating Temperature(C)	L1,L2	3~100	-10°C~+80°C									
Lubrication	L1,L2	3~100	Fully Synthetic Grease (COMPLEX HV2)									
Mounting Direction	L1,L2	3~100	Any Installation Direction									
Noise Level(db)	L1,L2	3~100	≦68	≦68	≦68	≦68	≦70	≦70	≦72	≦72	≦74	≦74

1/1, input speed needs should be ≤1500 RPM

* Detailed sizes of input shaft and flange C1~C7 are on page 38

PAW Series

2P Double Output Shaft Type

*PAW055A~PAW180A: Ratio(1/3~1/100)

Dimensions:

Unit:mm

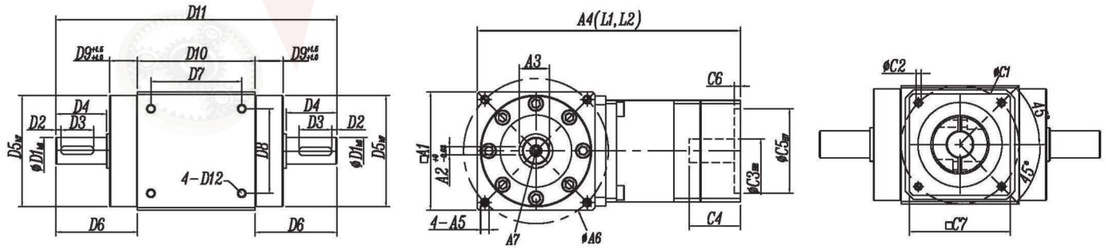

Specifications:

Unit:mm

Sizes	PAW055A	PAW070A	PAW085A	PAW105A	PAW125A	PAW125B	PAW150A	PAW150B	PAW180A	PAW180B
A1	55	70	85	105	125	125	150	150	180	180
A2	4	5	6	8	10	10	12	12	14	14
A3	14.5	18	22.5	31	35	35	43	43	53.5	53.5
A4 (L1)	127.5	157	173	223	281	247.5	368	312	403	368
A4 (L2)	153	178	194	250	308.5	274.5	414	340	455	414
A5	M5-10L	M5-12L	M6-12L	M8-15L	M8-15L	M8-15L	M10-18L	M10-18L	M12-18L	M12-18L
A6	65	86	100	118	145	145	185	185	200	200
A7	M4	M5	M6	M8	M8	M8	M12	M12	M12	M12
D1	13	16	20	28	32	32	40	40	50	50
D2	3	3	3.5	3	3	3	3	3	3	3
D3	20	20	25	30	40	40	50	50	60	60
D4	26	30	35	40	50	50	63	63	73	73
D5	53.5	66	82	100	120	120	135	135	165	165
D6	40.25	48.5	52.5	60.5	71.5	71.5	85	85	96	96
D7	45	54	68	80	100	100	120	120	141.4	141.4
D8	34	50	52	60	80	80	100	100	141.4	141.4
D9	12.75	16.5	15.5	18.5	19.5	19.5	20	20	21	21
D10	55	70	85	105	125	125	150	150	180	180
D11	135.5	167	190	226	268	268	320	320	372	372
D12	M5-10L	M5-12L	M6-12L	M8-15L	M8-15L	M8-15L	M10-18L	M10-18L	M12-18L	M12-18L
C1	≦70	≦90	≦90	≦145	≦200	≦145	≦215	≦200	≦215	≦215
C2	≦M4	≦M6	≦M6	≦M8	≦M12	≦M8	≦M12	≦M12	≦M12	≦M12
C3	≦11	≦19	≦19	≦24	≦35	≦24	≦42	≦35	≦42	≦42
C4	≦30	≦41	≦41	≦62	≦80	≦62	≦116	≦80	≦116	≦116
C5	≦50	≦70	≦70	≦110	≦114.3	≦110	≦180	≦114.3	≦180	≦180
C6	≦3.5	≦5	≦5	≦7	≦7	≦7	≦7	≦7	≦7	≦7
C7	≦60	≦80	≦80	≦120	≦176	≦120	≦196	≦176	≦220	≦176

* Detailed sizes of input shaft and flange C1~C7 are on page 38

PAW Series

P Single Output Shaft Type

*PAW070A~PAW180A: Ratio(1/3~1/100)

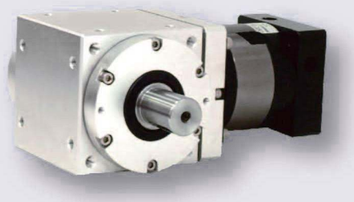

Dimensions: Unit:mm

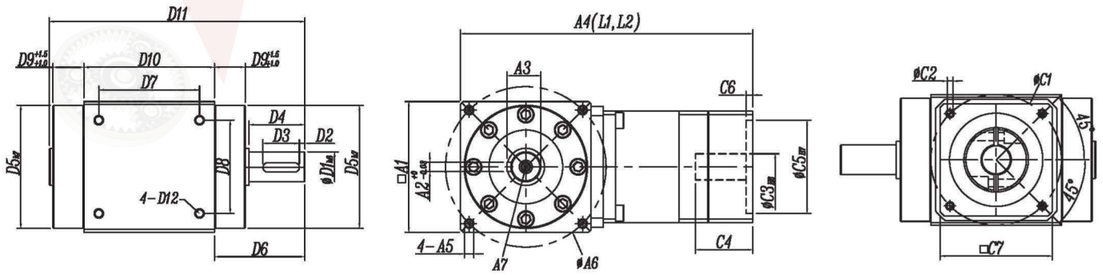

Specifications: Unit:mm

Sizes	PAW055A	PAW070A	PAW085A	PAW105A	PAW125A	PAW125B	PAW150A	PAW150B	PAW180A	PAW180B
A1	55	70	85	105	125	125	150	150	180	180
A2	4	5	6	8	10	10	12	12	14	14
A3	14.5	18	22.5	31	35	35	43	43	53.5	53.5
A4 (L1)	127.5	157	173	223	281	247.5	368	312	403	368
A4 (L2)	153	178	194	250	308.5	274.5	414	340	455	414
A5	M5-10L	M5-12L	M6-12L	M8-15L	M8-15L	M8-15L	M10-18L	M10-18L	M12-18L	M12-18L
A6	65	86	100	118	145	145	185	185	200	200
A7	M4	M5	M6	M8	M8	M8	M12	M12	M12	M12
D1	13	16	20	28	32	32	40	40	50	50
D2	3	3	3.5	3	3	3	3	3	3	3
D3	20	20	25	30	40	40	50	50	60	60
D4	26	30	35	40	50	50	63	63	73	73
D5	53.5	66	82	100	120	120	135	135	165	165
D6	40.25	48.5	52.5	60.5	71.5	71.5	85	85	96	96
D7	45	54	68	80	100	100	120	120	141.4	141.4
D8	34	50	52	60	80	80	100	100	141.4	141.4
D9	12.75	16.5	15.5	18.5	19.5	19.5	20	20	21	21
D10	55	70	85	105	125	125	150	150	180	180
D11	109.5	137	155	186	218	218	257	257	299	299
D12	M5-10L	M5-12L	M6-12L	M8-15L	M8-15L	M8-15L	M10-18L	M10-18L	M12-18L	M12-18L
C1	≦70	≦90	≦90	≦145	≦200	≦145	≦215	≦200	≦215	≦215
C2	≦M4	≦M6	≦M6	≦M8	≦M12	≦M8	≦M12	≦M12	≦M12	≦M12
C3	≦11	≦19	≦19	≦24	≦35	≦24	≦42	≦35	≦42	≦42
C4	≦38	≦41	≦41	≦62	≦80	≦62	≦116	≦80	≦116	≦116
C5	≦50	≦70	≦70	≦110	≦114.3	≦110	≦180	≦114.3	≦180	≦180
C6	≦3.5	≦5	≦5	≦7	≦7	≦7	≦7	≦7	≦7	≦7
C7	≦60	≦80	≦80	≦120	≦176	≦120	≦196	≦176	≦220	≦176

* Detailed sizes of input shaft and flange C1~C7 are on page 38

PAW Series

2P–K Double Hollow Shaft Key Groove Type

*PAW070A~PAW180A: Ratio(1/3~1/100)

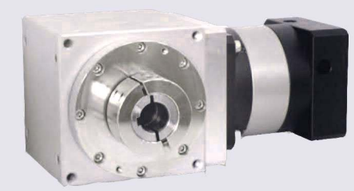

Dimensions: Unit:mm

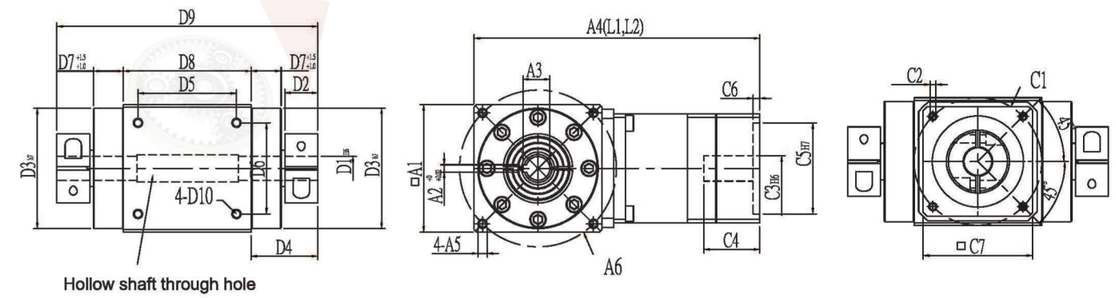

Specifications: Unit:mm

Sizes	PAW070A	PAW085A	PAW105A	PAW125A	PAW125B	PAW150A	PAW150B	PAW180A	PAW180B
A1	70	85	105	125	125	150	150	180	180
A2	4	5	6	8	8	10	10	14	14
A3	14.7	16.3	24.7	31.3	31.3	38.3	38.3	53.8	53.8
A4 (L1)	157	173	223	281	247.5	368	312	403	368
A4 (L2)	178	194	250	308.5	274.5	414	340	455	414
A5	M5-12L	M6-12L	M8-15L	M8-15L	M8-15L	M10-18L	M10-18L	M12-18L	M12-18L
A6	86	100	118	145	145	185	185	200	200
D1	13	15	22	28	28	35	35	50	50
D2	18	24	25	24	24	33	33	36.5	36.5
D3	66	82	100	120	120	135	135	165	165
D4	36.5	41.5	45.5	45.5	45.5	55	55	59.5	59.5
D5	54	68	80	100	100	120	120	141.4	141.4
D6	50	52	60	80	80	100	100	141.4	141.4
D7	16.5	15.5	18.5	19.5	19.5	20	20	21	21
D8	70	85	105	125	125	150	150	180	180
D9	143	168	196	216	216	260	260	299	299
D10	M5-12L	M6-12L	M8-15L	M8-15L	M8-15L	M10-18L	M10-18L	M12-18L	M12-18L
C1	≦90	≦90	≦145	≦200	≦145	≦215	≦200	≦215	≦215
C2	≦M6	≦M6	≦M8	≦M12	≦M8	≦M12	≦M12	≦M12	≦M12
C3	≦19	≦19	≦24	≦35	≦24	≦42	≦35	≦42	≦42
C4	≦41	≦41	≦62	≦80	≦62	≦116	≦80	≦116	≦116
C5	≦70	≦70	≦110	≦114.3	≦110	≦180	≦114.3	≦180	≦180
C6	≦5	≦5	≦7	≦7	≦7	≦7	≦7	≦7	≦7
C7	≦80	≦80	≦120	≦176	≦120	≦196	≦176	≦220	≦176

* Detailed sizes of input shaft and flange C1~C7 are on page 38

PAW Series

C-K Single Hollow Shaft Key Groove Type

*PAW070A~PAW180A: Ratio(1/3~1/100)

Dimensions: Unit:mm

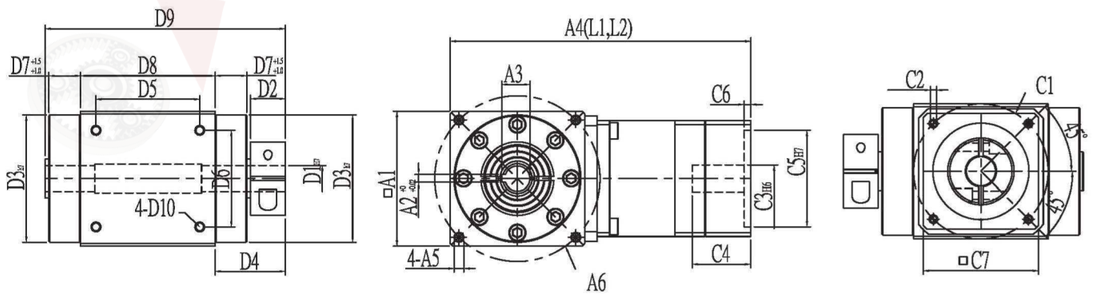

Specifications: Unit:mm

Sizes	PAW070A	PAW085A	PAW105A	PAW125A	PAW125B	PAW150A	PAW150B	PAW180A	PAW180B
A1	70	85	105	125	125	150	150	180	180
A2	4	5	6	8	8	10	10	14	14
A3	14.7	16.3	24.7	31.3	31.3	38.3	38.3	53.8	53.8
A4 (L1)	157	173	223	281	247.5	368	312	403	368
A4 (L2)	178	194	250	308.5	274.5	414	340	455	414
A5	M5-12L	M6-12L	M8-15L	M8-15L	M8-15L	M10-18L	M10-18L	M12-18L	M12-18L
A6	86	100	118	145	145	185	185	200	200
D1	13	15	22	28	28	35	35	50	50
D2	18	24	25	24	24	33	33	36.5	36.5
D3	66	82	100	120	120	135	135	165	165
D4	36.5	41.5	45.5	45.5	45.5	55	55	59.5	59.5
D5	54	68	80	100	100	120	120	141.4	141.4
D6	50	52	60	80	80	100	100	141.4	141.4
D7	16.5	15.5	18.5	19.5	19.5	20	20	21	21
D8	70	85	105	125	125	150	150	180	180
D9	125	144	171	192	192	227	227	262.5	262.5
D10	M5-12L	M6-12L	M8-15L	M8-15L	M8-15L	M10-18L	M10-18L	M12-18L	M12-18L
C1	≦90	≦90	≦145	≦200	≦145	≦215	≦200	≦215	≦215
C2	≦M6	≦M6	≦M8	≦M12	≦M8	≦M12	≦M12	≦M12	≦M12
C3	≦19	≦19	≦24	≦35	≦24	≦42	≦35	≦42	≦42
C4	≦41	≦41	≦62	≦80	≦62	≦116	≦80	≦116	≦116
C5	≦70	≦70	≦110	≦114.3	≦110	≦180	≦114.3	≦180	≦180
C6	≦5	≦5	≦7	≦7	≦7	≦7	≦7	≦7	≦7
C7	≦80	≦80	≦120	≦176	≦120	≦196	≦176	≦220	≦176

* Detailed sizes of input shaft and flange C1~C7 are on page 38

PAW Series

CR Hollow Shaft Key Groove Type

*PAW070A~PAW180A: Ratio(1/3~1/100)

Dimensions: Unit:mm

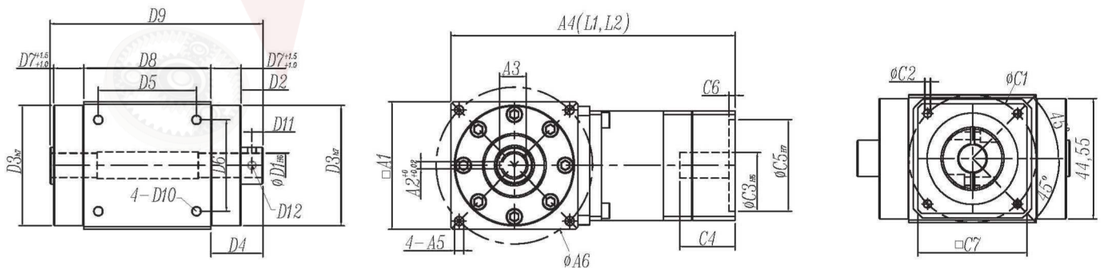

Specifications: Unit:mm

Sizes	PAW070A	PAW085A	PAW105A	PAW125A	PAW125B	PAW150A	PAW150B	PAW180A	PAW180B
A1	70	85	105	125	125	150	150	180	180
A2	4	5	6	8	8	10	10	14	14
A3	14.7	17.3	24.7	31.3	31.3	38.3	38.3	53.8	53.8
A4 (L1)	156.5	173	223	281	247.5	368	312	403	368
A4 (L2)	177.5	194	250	308.5	274.5	414	340	455	414
A5	M5-12L	M6-12L	M8-15L	M8-15L	M8-15L	M10-18L	M10-18L	M12-18L	M12-18L
A6	86	100	118	145	145	185	185	200	200
D1	13	15	22	28	28	35	35	50	50
D2	10	10	10	12	12	14	14	18	18
D3	66	82	100	120	120	135	135	165	165
D4	26.5	25.5	28.5	31.5	31.5	34	34	39	39
D5	54	68	80	100	100	120	120	141.4	141.4
D6	50	52	60	80	80	100	100	141.4	141.4
D7	16.5	15.5	18.5	19.5	19.5	20	20	21	21
D8	70	85	105	125	125	150	150	180	180
D9	125	144	171	192	192	227	227	262.5	262.5
D10	M5-12L	M6-12L	M8-15L	M8-15L	M8-15L	M10-18L	M10-18L	M12-18L	M12-18L
D11	5	5	5	6	6	7	7	9	9
D12	2-M4	2-M4	2-M5	2-M6	2-M6	2-M8	2-M8	2-M12	2-M12
C1	≦90	≦90	≦145	≦200	≦145	≦215	≦200	≦215	≦215
C2	≦M6	≦M6	≦M8	≦M12	≦M8	≦M12	≦M12	≦M12	≦M12
C3	≦19	≦19	≦24	≦35	≦24	≦42	≦35	≦42	≦42
C4	≦41	≦41	≦62	≦80	≦62	≦116	≦80	≦116	≦116
C5	≦70	≦70	≦110	≦114.3	≦110	≦180	≦114.3	≦180	≦180
C6	≦5	≦5	≦7	≦7	≦7	≦7	≦7	≦7	≦7
C7	≦80	≦80	≦120	≦176	≦120	≦196	≦176	≦220	≦176

* Detailed sizes of input shaft and flange C1~C7 are on page 38

PT Series

CR Hollow Shaft Key Groove Type

*Steering gear PT070A~PT180B: Ratio 1:1

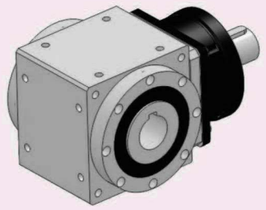

Dimensions: Unit:mm

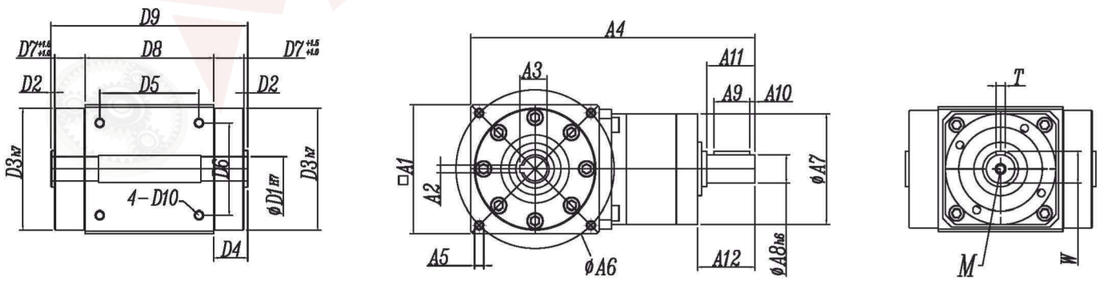

Specifications: Unit:mm

Sizes	PT070A	PT085A	PT105A	PT125B	PT150B	PT180B
A1	70	85	105	125	150	180
A2	4	5	6	8	10	14
A3	14.7	17.3	24.7	31.3	38.3	53.8
A4	163.7	181.2	205	282.5	271.5	297
A5	4-M5-12L	4-M6-12L	4-M8-15L	4-M8-15L	4-M10-18L	4-M12-18L
A6	86	100	118	145	185	200
A7	62	62	90	120	142	142
A8	16	20	28	28	35	50
A9	20	20	30	30	40	60
A10	3	3	3	3	3	3
A11	27	27	34	34	45	65
A12	32.2	32.2	44	44	51.5	70
D1	13	15	22	28	35	50
D2	2	2	2	2	2	2
D3	66	82	100	120	135	165
D4	18.5	17.5	20.5	21.5	22	23
D5	54	68	80	100	120	141.4
D6	50	52	60	80	100	141.4
D7	16.5	15.5	18.5	19.5	20	21
D8	70	85	105	125	150	180
D9	107	120	146	168	194	226
D10	4-M5-12L	4-M6-12L	4-M8-15L	4-M8-15L	4-M10-18L	4-M12-18L
T	5	6	8	8	10	14
W	18	22.5	31	31	38	53.5
M	M5	M6	M8	M8	M10	M12

* Detailed sizes of input shaft and flange C1~C7 are on page 38

PT Series

2P Double Output Shaft Type

*Steering gear PT070A~PT180B: Ratio 1:1

Dimensions: Unit:mm

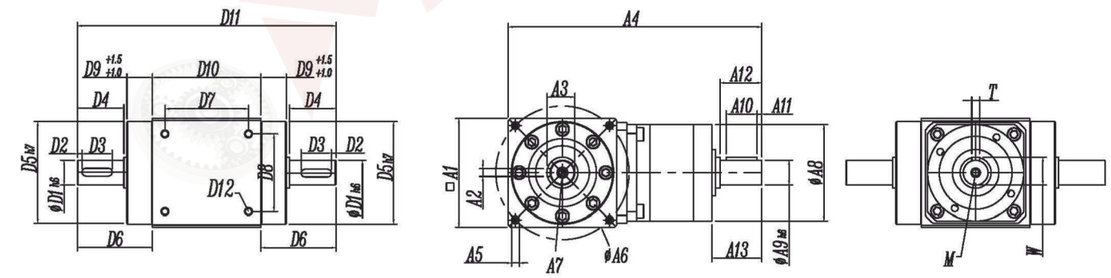

Specifications: Unit:mm

Sizes	PT070A	PT085A	PT105A	PT125B	PT150B	PT180B
A1	70	85	105	125	150	180
A2	5	6	8	10	12	14
A3	18	22.5	31	35	43	53.5
A4	163.7	181.2	204.5	223	282.5	311
A5	4-M5-12L	4- M6-12L	4-M8-15L	4-M8-15L	4-M10-18L	4-M12-18L
A6	86	100	118	145	185	200
A7	M5	M6	M8	M8	M12	M12
A8	62	62	95	95	120	142
A9	16	20	28	28	35	50
A10	20	20	30	30	40	60
A11	3	3	3	3	3	3
A12	27	27	34	34	45	65
A13	32.2	32.2	44	44	51.5	70
D1	16	20	28	32	40	50
D2	3	3.5	3	3	3	3
D3	20	25	30	40	50	60
D4	30	35	40	50	63	73
D5	66	82	100	120	135	165
D6	48.5	52.5	60.5	71.5	85	96
D7	54	68	80	100	120	141.4
D8	50	52	60	80	100	141.4
D9	16.5	15.5	18.5	19.5	20	21
D10	70	85	105	125	150	180
D11	167	190	226	268	320	372
D12	4-M5-12L	4- M6-12L	4-M8-15L	4-M8-15L	4-M10-18L	4-M12-18L
T	5	6	8	8	10	14
W	18	22.5	31	31	38	53.5
M	M5	M6	M8	M8	M10	M12

* Detailed sizes of input shaft and flange C1~C7 are on page 38

PT Series

P Single Output Shaft Type

*Steering gear PT070A~PT180B: Ratio 1:1

Dimensions: Unit:mm

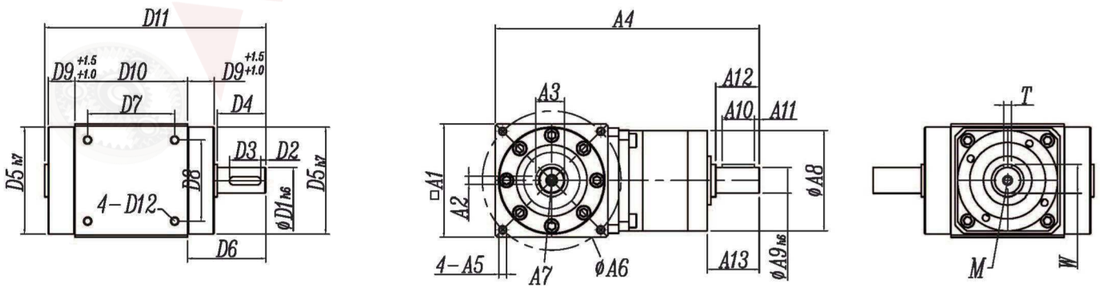

Specifications: Unit:mm

Sizes	PT070B R/L	PT085B R/L	PT105B R/L	PT125B R/L	PT150B R/L	PT180B R/L
A1	70	85	105	125	150	180
A2	5	6	8	10	12	14
A3	18	22.5	31	35	43	53.5
A4	163.7	181.2	204.5	223	282.5	311
A5	4-M5-12L	4-M6-12L	4-M8-15L	4-M8-15L	4-M10-18L	4-M12-18L
A6	86	100	118	145	185	200
A7	M5	M6	M8	M8	M12	M12
A8	62	62	95	95	120	142
A9	16	20	28	28	35	50
A10	20	20	30	30	40	60
A11	3	3	3	3	3	3
A12	27	27	34	34	45	65
A13	32.2	32.2	44	44	51.5	70
D1	16	20	28	32	40	50
D2	3	3.5	3	3	3	3
D3	20	25	30	40	50	60
D4	30	35	40	50	63	73
D5	66	82	100	120	135	165
D6	48.5	52.5	60.5	71.5	85	96
D7	54	68	80	100	120	141.4
D8	50	52	60	80	100	141.4
D9	16.5	15.5	18.5	19.5	20	21
D10	70	85	105	125	150	180
D11	137	155	186	218	257	299
D12	M5-12L	M6-12L	M8-15L	M8-15L	M10-18L	M12-18L
T	5	6	8	8	10	14
W	18	22.5	31	31	38	53.5
M	M5	M6	M8	M8	M10	M12

* Detailed sizes of input shaft and flange C1~C7 are on page 38

PT Series

2C–K Hollow Shaft Key Groove Type

*Steering gear PT070A~PT180B: Ratio 1:1

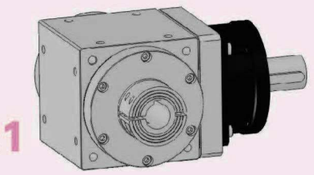

Dimensions: Unit:mm

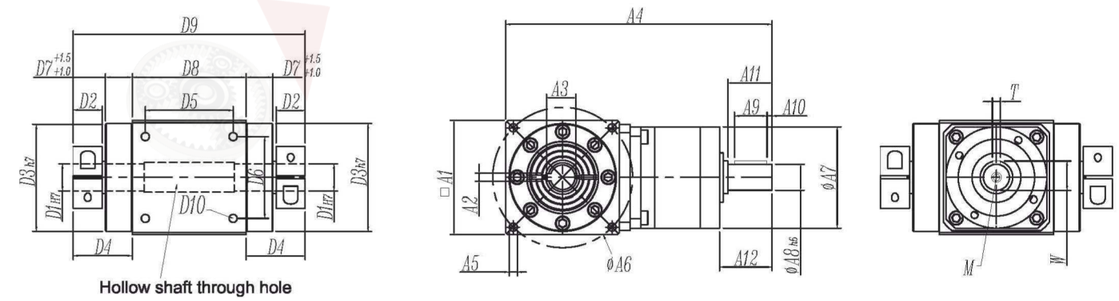

Specifications: Unit:mm

Sizes	PT070A	PT085A	PT105A	PT125B	PT150B	PT180B
A1	70	85	105	125	150	180
A2	4	5	6	8	10	14
A3	14.7	17.3	24.7	31.3	38.3	53.5
A4	163.7	181.2	204.5	223	282.5	311
A5	4-M5-12L	4- M6-12L	4-M8-15L	4-M8-15L	4-M10-18L	4-M12-18L
A6	86	100	118	145	185	200
A7	62	62	95	95	120	142
A8	16	20	28	28	35	50
A9	20	20	30	30	40	60
A10	3	3	3	3	3	3
A11	27	27	34	34	45	65
A12	32.2	32.2	44	44	51.5	70
D1	13	15	22	28	35	50
D2	18	24	25	24	33	36.5
D3	66	82	100	120	135	165
D4	36.5	41.5	45.5	45.5	55	59.5
D5	54	68	80	100	120	141.4
D6	50	52	60	80	100	141.4
D7	16.5	15.5	18.5	19.5	20	21
D8	70	85	105	125	150	180
D9	107	120	146	168	194	226
D10	4-M5-12L	4- M6-12L	4-M8-15L	4-M8-15L	4-M10-18L	4-M12-18L
T	5	6	8	8	10	14
W	18	22.5	31	31	38	53.5
M	M5	M6	M8	M8	M10	M12

* Detailed sizes of input shaft and flange C1~C7 are on page 38

PT Series

C-K Single Hollow Shaft Key Groove Type

*Steering gear PT070A~PT180B: Ratio 1:1

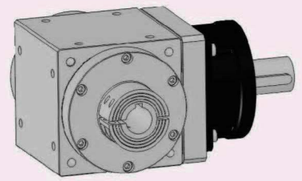

Dimensions:

Unit:mm

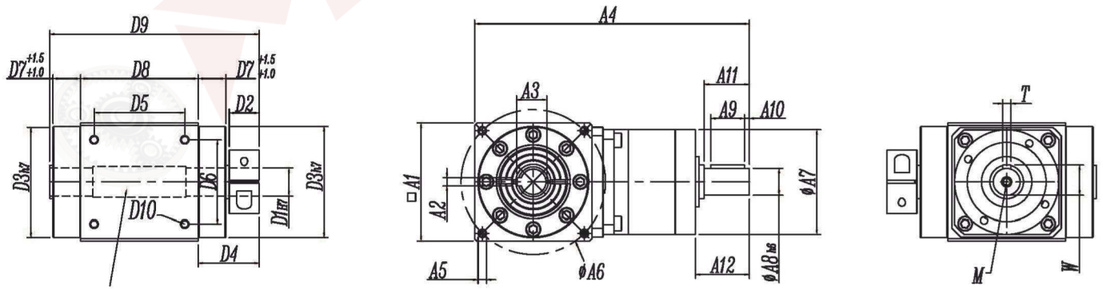

Hollow shaft through hole

Specifications:

Unit:mm

Sizes	PT070A	PT085A	PT105A	PT125B	PT150B	PT180B
A1	70	85	105	125	150	180
A2	4	5	6	8	10	14
A3	14.7	17.3	24.7	31.3	38.3	53.5
A4	163.7	181.2	204.5	223	282.5	311
A5	4-M5-12L	4- M6-12L	4-M8-15L	4-M8-15L	4-M10-18L	4-M12-18L
A6	86	100	118	145	185	200
A7	62	62	95	95	120	142
A8	16	20	28	28	35	50
A9	20	20	30	30	40	60
A10	3	3	3	3	3	3
A11	27	27	34	34	45	65
A12	32.2	32.2	44	44	51.5	70
D1	13	15	22	28	35	50
D2	18	24	25	24	33	36.5
D3	66	82	100	120	135	165
D4	36.5	41.5	45.5	45.5	55	59.5
D5	54	68	80	100	120	141.4
D6	50	52	60	80	100	141.4
D7	16.5	15.5	18.5	19.5	20	21
D8	70	85	105	125	150	180
D9	89	96	121	144	161	189.5
D10	4-M5-12L	4- M6-12L	4-M8-15L	4-M8-15L	4-M10-18L	4-M12-18L
T	5	6	8	8	10	14
W	18	22.5	31	31	38	53.5
M	M5	M6	M8	M8	M10	M12

* Detailed sizes of input shaft and flange C1~C7 are on page 38

PAW-A(B) /PT Series

Detailed Sizes Diagram of Input End

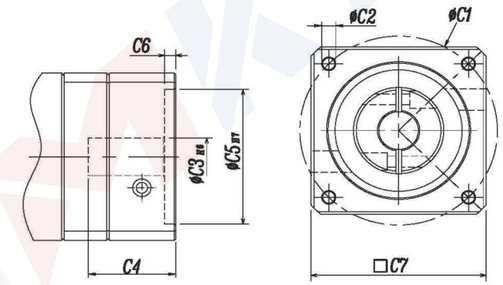

* Detailed sizes of input shaft and flange C1~C7
* Motor code refers to the sizes of input end of different brands
* Special products: the sizes of input flange can be made according to the customer' s specifications

Model	PAW055A		PAW070A/PAW085A								PAW105A										
Sizes / Motor code	S1	S2	S1	S2	S3	S4	S5	S6	S7	S8	S1	S2	S3	S4	S5	S6	S7	S8	S9	S10	S11
C1	45	46	45	46	70	70	70	90	90	66.7	70	70	70	90	90	90	90	100	145	145	145
C2	M3	M4	M3	M4	M4	M4	M5	M5	M6	M4	M3	M4	M5	M5	M6	M6	M6	M6	M8	M8	M8
C3 H6	8	8	8	8	11	14	14	14	14	6.35	11	14	14	14	14	16	19	16	19	22	24
C4	29	29	31	31	31	31	31	31	31	31	41	41	41	41	41	41	41	41	58	58	58
C5 H7	30	30	30	30	50	50	50	70	70	38.1	50	50	50	70	70	70	70	80	110	110	110
C6	3.5	3.5	3.5	3.5	3.5	3.5	3.5	3.5	3.5	3.5	5	5	5	5	5	5	5	5	5	5	5
C7	42	42	62	62	62	62	62	62	62	62	90	90	90	90	90	90	90	90	130	130	130

Model	PAW125A/PAW150B										PAW150A/PAW180B							
Sizes / Motor code	S1	S2	S3	S4	S5	S6	S7	S8	S9	S10	S1	S2	S3	S4	S5	S6	S7	S8
C1	90	90	100	115	115	130	145	145	145	145	115	115	145	145	145	145	200	165
C2	M6	M6	M6	M6	M8	M8	M8	M8	M8	M8	M6	M8	M8	M8	M8	M8	M12	M10
C3 H6	16	19	16	24	24	19	19	22	24	28	24	24	19	22	24	28	35	32
C4	54	54	54	54	54	62	62	62	62	63	60	60	65	65	65	65	81	65
C5 H7	70	70	80	95	95	110	110	110	110	110	95	95	110	110	110	110	114.3	130
C6	7	7	7	7	7	7	7	7	7	7	7	7	7	7	7	7	7	7
C7	120	120	120	120	120	120	120	120	120	120	142	142	142	142	142	142	176	142

Model	PAW180A										
Sizes / Motor code	S1	S2	S3	S4	S5	S6	S7	S8	S9	S10	S11
C1	145	145	145	115	200	200	165	215	235	235	265
C2	M8	M8	M8	M6	M12	M12	M10	M12	M12	M12	M10
C3 H6	19	22	24	28	35	42	32	38	42	55	55
C4	75	75	75	75	81	81	81	116	116	116	116
C5 H7	110	110	110	110	114.3	114.3	130	180	200	200	230
C6	10	10	10	10	10	10	10	10	10	10	10
C7	180	180	180	180	180	180	180	192	220	220	220

* Detailed sizes of input shaft and flange C1~C7 are on page 38

AAW-AS(BS)/AAT(M) Series

90 Degree Precision Speed Reducer

Multiple Output Shaft Type Reduction Ratio1:2-1:500

Applicable Servo Motor Capacity : 0.1kw-45kw

Large hollow shaft rotation flange: suitable for heavy load occasions.
TFT-LCD panel turnover, rotation mechanism, mechanical arm base rotation, swing arm rotation, indexing rotation and other mechanisms.

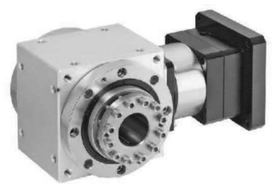

Hollow shaft tightening ring: suitable for heavy load occasions.
Roller mechanism, cam mechanism, conveying and transporting mechanism.

Output shaft type: applied in heavy load occasions.
Coupling mechanism, belt conveyor and other mechanisms.

Screw welding reducer: suitable for linear motion occasions.
Vertical, horizontal linear motion and other mechanisms.

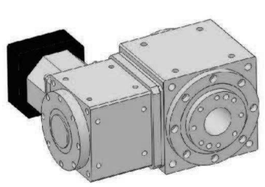

Hollow rotation platform: suitable for heavy load occasions.
TFT-LCD panel turnover, indexing plate and other mechanisms.

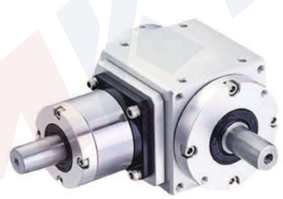

Steering gear

AAW-AS(BS)/AAT(M) Series

Performance table

Specification	Stage	Ratio (i)	AAW070AS	AAW080AS AAT080AS AATM080AS AAW080AS-HR	AAW110AS AAT110AS AATM110AS AAW110AS-HR	AAW135AS AAT135AS AATM135AS AAW135AS-HR	AAW136BS	AAW165AS AAT165AS AATM165AS	AAW165BS AATM165BS AAW165BS-HR	AAW200AS	AAW200BS AAT200BS AATM200BS AAW200BS-HR	AAW320AS AAW320AS-HR	AAW320BS
Rated Output Torque(Nm)	L1	1/2,1/3,1/5,1/10	30	80	250	450		800		2000		3500	
		1/6		80	200	400	280	700	600	1500	1000	3500	2000
		1/8		85	250	450	320	800	660	1850	1100	4000	2300
		1/10		85	250	450	320	800	660	1850	1100	4000	2300
		1/12		80	225	435	320	750	660	1850	1100		2300
		1/14		80	215	425	280	750	600	1750	1000	3500	2200
		1/16		80	210	415	270	700	600	1700	1000		
		1/20	30	70	200	400	240	700	460	1650	900	3000	1900
	L2	1/30	30	80	200	400	280	700	600	1500	1000	3500	2000
		1/32		85	250	450	320	800	660	1850	1100	4000	2300
		1/40	30	85	250	450	320	800	660	1850	1100	4000	2300
		1/50	30	85	250	450	320	800	660	1850	1100	4000	2300
		1/56		85	250	450	320	800	660	1850	1100	3500	2300
		1/60		80	200	400	280	700	600	1500	1000	3500	2000
		1/70	30	85	250	450	320	800	660	1850	1100	3500	2200
		1/80		85	250	450	320	800	660	1850	1100	3500	2300
		1/100	30	85	250	450	320	800	660	1850	1100	3500	2300
		1/120		80	225	435	290	750	630	1750	1050		2200
		1/140		80	215	425	280	750	630	1750	1000	3200	2100
		1/160		80	210	415	270	700	600	1700	950		
		1/200	30	70	200	400	240	700	460	1700	900	3000	1900
Max. Output torque (Nm)	L1, L2	3~100	2.5 Times of Rated Output Torque (Nm)										
Input speed (rpm)	L1, L2	3~100	3000	3000	3000	3000	3000	3000	3000	3000	3000	3000	3000
Standard Backlash (arc-min)	L1	3~10	≦5	≦5	≦5	≦5	≦5	≦5	≦5	≦5	≦5	≦5	≦5
	L2	12~100	≦8	≦8	≦8	≦8	≦8	≦8	≦8	≦8	≦8	≦8	≦8
Precision Backlash B2 (arc-min)	L1	3~10	≦3	≦3	≦3	≦3	≦3	≦3	≦3	≦3	≦3	≦3	≦3
	L2	12~100	≦4	≦4	≦4	≦4	≦4	≦4	≦4	≦4	≦4	≦4	≦4
Precision Backlash B1 (arc-min)	L1	3~10	≦2	≦2	≦2	≦2	≦2	≦2	≦2	≦2	≦2	≦2	≦2
	L2	12~100	≦3	≦3	≦3	≦3	≦3	≦3	≦3	≦3	≦3	≦3	≦3
Precision Backlash B0 (arc-min)	L1	3~10	≦1	≦1	≦1	≦1	≦1	≦1	≦1	≦1	≦1	≦1	≦1
	L1	3~10	≦2	≦2	≦2	≦2	≦2	≦2	≦2	≦2	≦2	≦2	≦2
Allowable Radial Force(N)	L1, L2	3~100	2800	3900	5500	9800	9800	16500	16500	24100	24100	32600	32600
Allowable Axial Force (N)	L1, L2	3~100	2800	3900	5500	9800	9800	16500	16500	24100	24100	32600	32600
Efficiency (%)	L1	3~10	90%										
	L2	12~100	85%										
Weight	L1	3~10	2.5	4.3	7.8	20.8	15.5	35.5	28.5	55	40.5	300	270
	L2	12~100	3.8	6.3	9.2	24.3	18.2	40.5	31.2	65.5	48.5	330	290
Operating Temperature(C)	L1, L2	3~100	-10°C~+80°C										
Lubrication	L1, L2	3~100	Fully Synthetic Grease(COMPLEX HV2)										
Mounting Direction	L1, L2	3~100	Any Installation Direction										
Noise Level(db)	L1, L2	3~100	≦65	≦68	≦68	≦68	≦68	≦70	≦70	≦72	≦72	≦72	≦72

* 1/2, input speed should be ≤2000 RPM
* 1/3, input speed should be ≤3000 RPM
* Detailed sizes of input shaft and flange C1~C7 are on page 57

Model Description

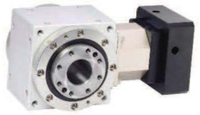

AAW Series:AAW070AS~AAW320AS(BS)

AAW080AS — L1 — 20 — RF — S1 — B1 — Y

AAW080AS

AAW070AS
AAW080AS
AAW110AS
AAW135AS(BS)
AAW165AS(BS)
AAW200AS(BS)
AAW320AS(BS)

L1

Stages
L1 (1-stage ratio)
L2 (2-stage ratio)

20

Ratio of Reducer :AAW070AS~AAW320AS(BS)
L1 :2, 3, 5, 6, 8, 9, 10, 12, 15, 16, 18, 20, 21, 24, 30
L2 :24, 32, 36. 40, 42, 45, 48, 50, 56, 60, 63, 70, 75, 80, 84, 90, 100, 105, 120, 140, 150, 160, 180, 200, 210, 240, 300
P. S:AAW070AS(1/3, 1/5, 1/10, 1/15, 1/20, 1/25, 1/30, 1/40, 1/50, 1/70, 1/100)

RF

Output Shaft Type
P: Single Solid Output Shaft
2P: Double Solid Output Shaft
CR: Hollow Shaft with Keyway
RF: Hollow Rotating Flange
RF-K: Hollow shaft Rotating Flange + Keyway
RFHP: Hollow Shaft with Conical Tight Ring
HR: Hollow Rotary Actuator
BS: Ball Screw Type

S1

Servo Motor Mark: S1~S11
If no mark, please offer:
Servo motor brand / Specs

B1

Backlash Grade(AAW070AS~320AS)

No Marks: stands for standard backlash
L1≤5 arcmin L2≤8 arcmin

Precision Backlash B1
L1≤2 arcmin L2≤3 arcmin

Precision Backlash B2
L1≤3 arcmin L2≤4 arcmin

Special type: B0 Ultra-precision Backlash
(L1≤1 arcmin L2≤2 arcmin)

Y

No marks:
stand for Standard Type
Special Mark:
Input and output dimensions are customized according to customer's request.

Model Description

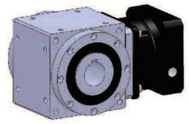

AAT Series:AAT(M)070AS~AAT(M)320AS

AAT080AS — 2 — P — L — S

AAT080AS

Reducer Model
AAT080AS, AAT110AS, AAT135AS, AAT165AS, AAT200BS
AATM070AS, AATM080AS, AATM110AS, AATM135AS, AATM165AS, AATM200BS, AATM320AS
AATM080AS-2AX, AATM110AS-2AX, AATM135AS-2AX, AATM165AS-2AX, AATM200BS-2AX

2

Reduction Ratio
2, 3, 5, 7, 10

P

Output shaft type
P: Single output shaft
2P: Double output shaft
CR: Hollow shaft with keyway
RF: Hollow rotating flange
RFHP: Hollow shaft tight ring
*RFC: Special Type RFC: hollow shaft clamping with keyway

L

Direction of input shaft and output shaft
No marks: 2C, CR
L: Left rotation (Input for right rotation-output for left rotation)
R: Right rotation (Input for right rotation-output for right rotation)

S

Input sizes mark
S1-S11: Input sizes mark
Note
1.Factory brand specs of servo motor shall be noted if no marks
2.RT no such marks

AAW-A(B)S Series

RF Big Hollow Shaft Rotary Flange Type

*AAW070AS~AAW320AS: Ratio(1/2~1/500)

Dimensions:

Unit:mm

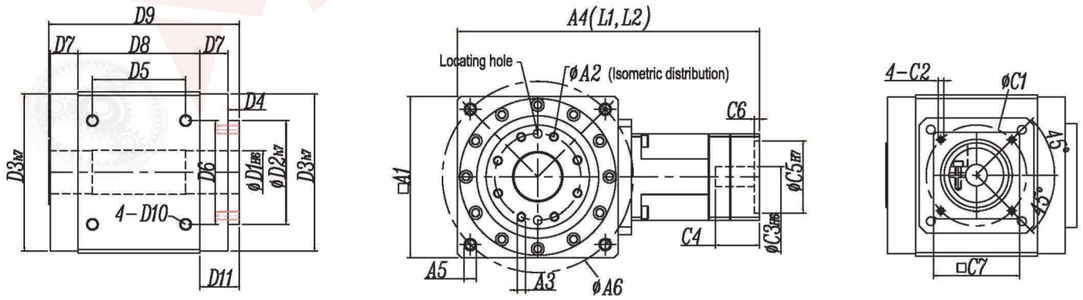

P.S:A6 (Optional through hole)

Specifications:

Unit:mm

Sizes	AAW070AS	AAW080AS	AAW110AS	AAW135AS	AAW135BS	AAW165AS	AAW165BS	AAW200AS	AAW200BS	AAW320AS	AAW320BS
A1	70	80	110	138	135	168	165	200	200	320	320
A2	30	36	50	70	70	95	95	124	124	193	193
A3	6-M5-10L	8-M5-10L	8-M5-15L	8-M8-15L	8-M8-15L	8-M8-15L	8-M8-15L	12-M8-15L	12-M8-15L	12-M14-25L	12-M14-18L
A4 (L1)	160/168	175/167	226/224	303/290	252/250	359/343	334/321	397/413	423/407	671	539
A4 (L2)	183/199	206/190	268/255	362/331	290/277	434/389	393/356	487/464	469/424	741	590
A5	4-M5-10L	4-M6-12L	4-M8-15L	4-M10-18L	4-M10-18L	4-M12-20L	4-M12-20L	4-M16-30L	4-M16-30L	4-M20-35L	4-M20-30L
A6	75	93	130	160	160	193	193	240	240	380	380
D1	16	20	30	40	40	55	55	80	80	110	110
D2	38	45	65	85	85	110	110	140	140	220	220
D3	60	78	106	133	133	163	163	195	195	306	306
D4	8.25	7	9.5	9.5	9.5	17	17	22	22	17.5	17.5
D5	42.43	49.5	68	86	78	106	100	141	129	170	170
D6	42.43	49.5	65	83	83	105	105	130	130	220	220
D7	6.25	13	15	10	19	13	19	8.5	22	30	30
D8	70	67	90	120	102	142	130	182	155	236	236
D9	92.25	102	131.5	151.5	151.5	187	187	223	223	316.5	316.5
D10	4-M5-10L	4-M6-12L	4-M8-15L	4-M10-18L	4-M10-18L	4-M14-16L	4-M14-16L	4-M14-20L	4-M14-20L	6-M20-35L	6-M20-35L
D11	14.5	20	24.5	19.5	28.5	30	36	30.5	44	47.5	47.5
C1	≦70	≦90	≦145	≦200	≦145	≦215	≦200	≦215	≦215	≦400	≦265
C2	≦M5	≦M6	≦M8	≦M12	≦M8	≦M12	≦M12	≦M12	≦M12	≦M18	≦M14
C3	≦14	≦19	≦24	≦35	≦24	≦42	≦35	≦42	≦42	≦60	≦55
C4	≦31	≦41	≦62	≦80	≦62	≦116	≦80	≦116	≦116	≦145	≦116
C5	≦50	≦70	≦110	≦114.3	≦110	≦180	≦114.3	≦180	≦180	≦300	≦230
C6	≦3.5	≦3.5	≦7	≦7	≦7	≦7	≦7	≦7	≦7	≦7	≦7
C7	≦62	≦80	≦120	≦180	≦120	≦200	≦180	≦200	≦200	≦350	≦250

* Detailed sizes of input shaft and flange C1~C7 are on page 57

AAW-A(B)S Series

RFHP Big Hollow Shaft Tight Ring Type

*AAW070AS~AAW320A(B)S: Ratio(1/2~1/500)

Dimensions:

Unit:mm

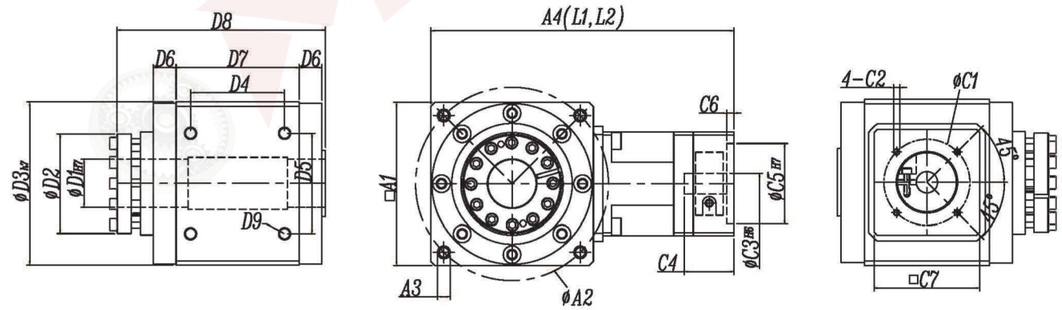

P.S:A2 (Optional through hole)

Specifications:

Unit:mm

Sizes	AAW080AS	AAW110AS	AAW135AS	AAW135BS	AAW165AS	AAW165BS	AAW200AS	AAW200BS	AAW320AS	AAW320BS
A1	80	110	138	135	168	165	200	200	320	320
A2	93	130	160	160	193	193	240	240	380	380
A3	4-M6-12L	4-M8-15L	4-M10-18L	4-M10-18L	4-M12-20L	4-M12-20L	4-M16-30L	4-M16-30L	4-M20-35L	4-M20-35L
A4 (L1)	175/167	226/224	303/290	252/250	359/343	334/321	397/413	423/407	671	539
A4 (L2)	206/190	268/255	362/331	290/277	434/389	393/356	487/464	469/424	741	590
D1	20	30	40	40	55	55	65	65	105	105
D2	45	65	85	85	110	110	140	140	220	220
D3	78	106	133	133	163	163	195	195	306	306
D4	49.5	68	86	78	106	100	141	129	175	175
D5	49.5	65	83	83	105	105	130	130	220	220
D6	13	15	10	19	13	19	8.5	22	30	30
D7	67	90	120	102	142	130	182	155	236	236
D8	113	144.5	173.5	173.5	206	206	243.5	243.5	337	337
D9	4-M6-12L	4-M8-15L	4-M10-18L	4-M10-18L	4-M14-16L	4-M14-16L	4-M14-20L	4-M14-20L	6-M20-30L	6-M20-30L
C1	≦90	≦145	≦200	≦145	≦215	≦200	≦215	≦215	≦400	≦265
C2	≦M6	≦M8	≦M12	≦M8	≦M12	≦M12	≦M12	≦M12	≦M18	≦M14
C3	≦19	≦24	≦35	≦24	≦42	≦35	≦42	≦42	≦60	≦55
C4	≦41	≦62	≦80	≦62	≦116	≦80	≦116	≦116	≦145	≦116
C5	≦70	≦110	≦114.3	≦110	≦180	≦114.3	≦180	≦180	≦300	≦230
C6	≦3.5	≦7	≦7	≦7	≦7	≦7	≦7	≦7	≦7	≦7
C7	≦80	≦120	≦180	≦120	≦200	≦180	≦200	≦200	≦350	≦250

* Detailed sizes of input shaft and flange C1~C7 are on page 57

AAW-A(B)S Series

RFK Flange With Key Groove Type

*AAW070AS~AAW200A(B)S: Ratio(1/2~1/500)

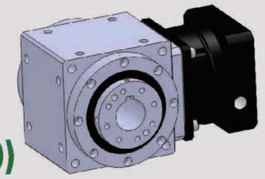

Dimensions:

Unit:mm

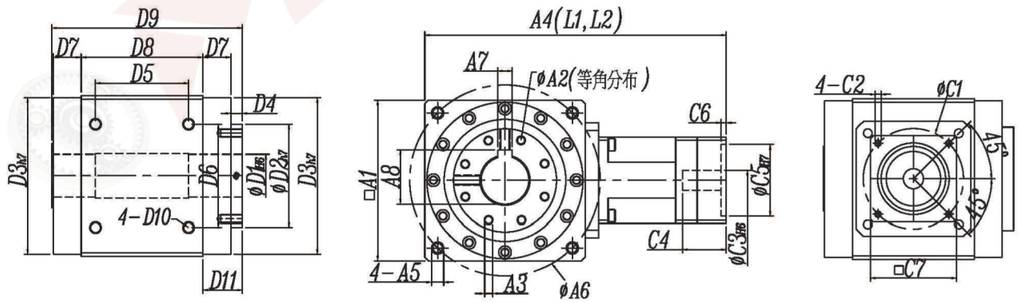

P.S:A6 (Optional through hole)

Specifications:

Unit:mm

Sizes	AAW070AS	AAW080AS	AAW110AS	AAW135AS	AAW135BS	AAW165AS	AAW165BS	AAW200AS	AAW200BS
A1	70	80	110	138	135	168	165	200	200
A2	30	36	50	70	70	95	95	124	124
A3	6-M5-10L	8-M5-10L	8-M5-15L	8-M8-15L	8-M8-15L	8-M8-15L	8-M8-15L	12-M8-15L	12-M8-15L
A4 (L1單段)	160/168	175/167	226/224	303/290	252/250	359/343	334/321	397/413	423/407
A4 (L2雙段)	183/199	206/190	264/250	362/331	290/277	434/389	393/356	487/464	469/424
A5	4-M5-10L	4-M6-12L	4-M8-15L	4-M10-18L	4-M10-18L	4-M12-20L	4-M12-20L	4-M14-25L	4-M14-25L
A6	75	93	130	160	160	193	193	240	240
A7	5	6	8	12	12	14	14	18	18
A8	18	22.8	33.3	43.3	43.3	59.1	59.1	84.7	84.7
D1	16	20	30	40	40	55	55	80	80
D2	38	45	65	85	85	110	110	140	140
D3	60	78	106	133	133	163	163	195	195
D4	8.25	7	9.5	9.5	9.5	17	17	22	22
D5	42.43	49.5	68	86	78	106	100	141	129
D6	42.43	49.5	65	83	83	105	105	130	130
D7	6.25	13	15	10	19	13	19	8.5	22
D8	70	67	90	120	102	142	130	182	155
D9	92.25	102	131.5	151.5	151.5	187	187	223	223
D10	4-M5-10L	M6-12L	M8-15L	M10-18L	M10-18L	M14-16L	M14-16L	M14-20L	M14-20L
D11	14.5	20	24.5	19.5	28.5	30	36	30.5	44
C1	≦70	≦90	≦145	≦200	≦145	≦215	≦200	≦215	≦215
C2	≦M5	≦M6	≦M8	≦M12	≦M8	≦M12	≦M12	≦M12	≦M12
C3	≦14	≦19	≦24	≦35	≦24	≦42	≦35	≦42	≦42
C4	≦31	≦41	≦62	≦80	≦62	≦116	≦80	≦116	≦116
C5	≦50	≦70	≦110	≦114.3	≦110	≦180	≦114.3	≦180	≦180
C6	≦3.5	≦3.5	≦7	≦7	≦7	≦7	≦7	≦7	≦7
C7	≦62	≦80	≦120	≦180	≦120	≦200	≦180	≦200	≦200

* Detailed sizes of input shaft and flange C1~C7 are on page 57

AAW-A(B)S Series

2P Double Output Shaft Type

*AAW080AS~AAW200A(B)S: Ratio(1/2~1/500)

Dimensions:

Unit:mm

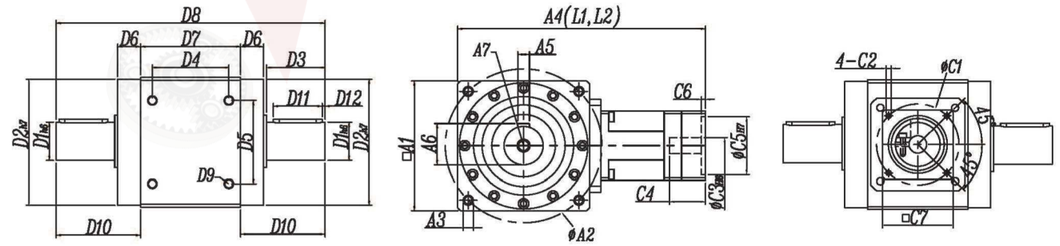

P.S:A2 (Optional through hole)

Specifications:

Unit:mm

Sizes	AAW080AS	AAW110AS	AAW135AS	AAW135BS	AAW165AS	AAW165BS	AAW200AS	AAW200BS
A1	80	110	138	135	168	165	200	200
A2	93	130	160	160	193	193	240	240
A3	4-M6-12L	4-M8-15L	4-M10-18L	4- M10-18L	4-M12-20L	4-M12-20L	4-M16-30L	4-M16-30L
A4 (L1單段)	175/167	226/224	303/290	252/250	359/343	334/321	397/413	423/407
A4 (L2雙段)	206/190	268/255	362/331	290/277	434/389	393/356	487/464	469/424
A5	6	8	12	12	16	16	20	20
A6	22.5	33	43	43	59	59	79.5	79.5
A7	M6	M8	M12	M12	M16	M16	M20	M20
D1	20	30	40	40	55	55	75	75
D2	78	106	133	133	163	163	195	195
D3	35	45	55	55	80	80	100	100
D4	49.5	68	86	78	106	100	141	129
D5	49.5	65	83	83	105	105	130	130
D6	13	15	10	19	13	19	8.5	22
D7	67	90	120	102	142	130	182	155
D8	166.5	214	256	256	332	332	402	402
D9	M6-12L	M8-15L	M10-18L	M10-18L	M14-16L	M14-16L	M14-20L	M14-20L
D10	49.75	62	68	68	95	95	110	110
D11	25	35	45	45	70	70	90	90
D12	5	5	5	5	3	3	5	5
C1	≦90	≦145	≦200	≦145	≦215	≦200	≦215	≦215
C2	≦M6	≦M8	≦M12	≦M8	≦M12	≦M12	≦M12	≦M12
C3	≦19	≦24	≦35	≦24	≦42	≦35	≦42	≦42
C4	≦41	≦62	≦80	≦62	≦116	≦80	≦116	≦116
C5	≦70	≦110	≦114.3	≦110	≦180	≦114.3	≦180	≦180
C6	≦3.5	≦7	≦7	≦7	≦7	≦7	≦7	≦7
C7	≦80	≦120	≦180	≦120	≦200	≦180	≦200	≦200

* Detailed sizes of input shaft and flange C1~C7 are on page 57

AAW-A(B)S Series

P Single Output Shaft Type

*AAW080AS~AAW200A(B)S: Ratio(1/2~1/500)

Dimensions:

Unit:mm

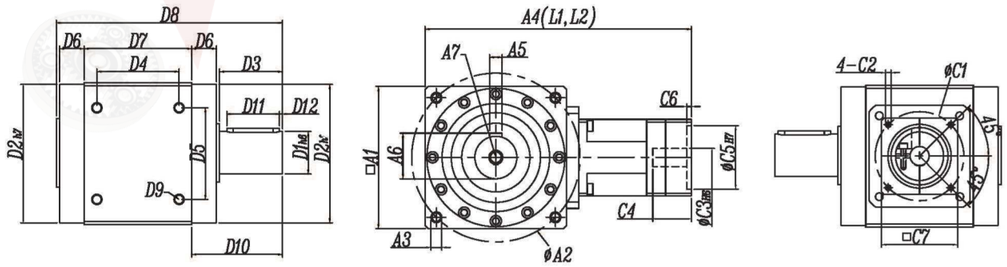

P.S:A2 (Optional through hole)

Specifications:

Unit:mm

Sizes	AAW080AS	AAW110AS	AAW135AS	AAW135BS	AAW165AS	AAW165BS	AAW200AS	AAW200BS	AAW320AS	AAW320BS
A1	80	110	138	135	168	165	200	200	320	320
A2	93	130	160	160	193	193	240	240	380	380
A3	4-M6-12L	4-M8-15L	4-M10-18L	4- M10-18L	4-M12-20L	4-M12-20L	4-M16-30L	4-M16-30L	4-M20-35L	4-M20-35L
A4 (L1)	175/167	226/224	303/290	252/250	359/343	334/321	397/413	423/407	671	539
A4 (L2)	206/190	268/255	362/331	290/277	434/389	393/356	487/464	469/424	741	590
A5	6	8	12	12	16	16	20	20	32	32
A6	22.5	33	43	43	59	59	79.5	79.5	127	127
A7	M6	M8	M12	M12	M16	M16	M20	M20	M20	M20
D1	20	30	40	40	55	55	75	75	120	120
D2	78	106	133	133	163	163	195	195	306	306
D3	35	45	55	55	80	80	100	100	150	150
D4	49.5	68	86	78	106	100	141	129	170	170
D5	49.5	65	83	83	105	105	130	130	220	220
D6	13	15	10	19	13	19	8.5	22	30	30
D7	67	90	120	102	142	130	182	155	236	236
D8	131.5	169	201	201	252	252	302	302	452	452
D9	M6-12L	M8-15L	M10-18L	M10-18L	M14-16L	M14-16L	M14-20L	M14-20L	6-M20-30L	6-M20-30L
D10	49.75	62	68	68	95	95	110	110	183	183
D11	25	35	45	45	70	70	90	90	120	120
D12	5	5	5	5	3	3	5	5	15	15
C1	≦90	≦145	≦200	≦145	≦215	≦200	≦215	≦215	≦350	≦215
C2	≦M6	≦M8	≦M12	≦M8	≦M12	≦M12	≦M12	≦M12	≦M18	≦M12
C3	≦19	≦24	≦35	≦24	≦42	≦35	≦42	≦42	≦60	≦42
C4	≦41	≦62	≦80	≦62	≦116	≦80	≦116	≦116	≦135	≦116
C5	≦70	≦110	≦114.3	≦110	≦180	≦114.3	≦180	≦180	≦250	≦180
C6	≦3.5	≦7	≦7	≦7	≦7	≦7	≦7	≦7	≦7	≦7
C7	≦80	≦120	≦180	≦120	≦200	≦180	≦200	≦200	≦300	≦200

* Detailed sizes of input shaft and flange C1~C7 are on page 57

Screw Reducer

*AAW080AS~200AS-L1(2)-□-BS-S□

*BS: Screw Code

*L1(2)-□: Gear Ratio

*S□: S1~S11(Input End Size Mark)

Dimensions:

Unit:mm

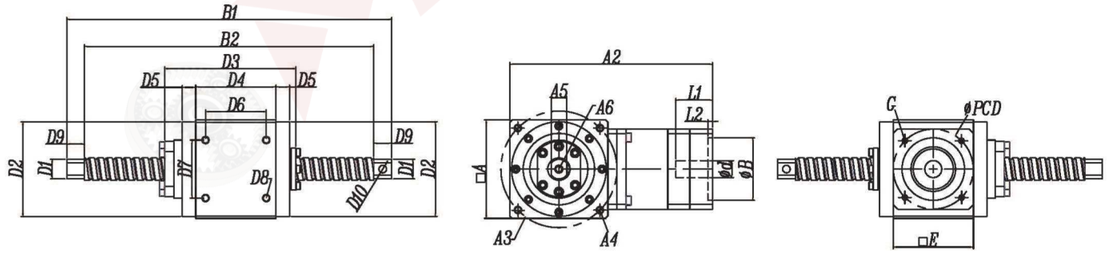

P.S: 1. The screw length is made according to the customer's specifications
2. The sizes of the two shaft ends are made according to the customer's specifications
3. Sizes of A4 (optional through hole)

Specifications:

Unit:mm

Sizes	AAW080AS-BS	AAW110AS-BS	AAW135AS-BS	AAW135BS-BS	AAW165AS-BS	AAW165BS-BS	AAW200AS-BS	AAW200BS-BS
□A1	80	110	138	138	168	168	200	200
A2	157.7	192.5	244.5	244.5	278	278	312	312
A3	93	130	160	160	193	193	240	240
A4	4-M6-12L	4-M8-15L	4-M10-18L	4-M10-18L	4-M12-20L	4-M12-20L	4-M16-30L	4-M16-30L
A5	12	17	22	22	33	33	43	43
A6	M6	M8	M10	M10	M12	M12	M16	M16
Ø D1 H7	16	25	32	32	40	40	50	50
Ø D2 h7	78	106	133	133	163	163	195	195
D3 (±3mm)	125	158	184	184	223	223	263	263
D4	67	90	120	120	142	142	182	155
D5	13	15	10	10	13	13	8.5	22
D6	49.5	68	86	86	106	106	141	129
D7	49.5	65	83	83	105	105	130	130
D8	4-M6-12L	4-M8-15L	4-M10-18L	4-M10-18L	4-M14-16L	4-M14-16L	4-M14-25L	4-M14-25L
D9	15	20	25	25	35	35	50	50
D10	6.5	8.5	10.5	10.5	14.5	14.5	20.5	20.5
Ø d H6	≦19	≦24	≦35	≦35	≦42	≦42	≦42	≦42
ØB H7	≦70	≦110	≦114.3	≦114.3	≦180	≦180	≦180	≦180
L1	≦41	≦60	≦80	≦80	≦116	≦116	≦116	≦116
L2	≦5	≦6	≦6	≦6	≦6	≦6	≦6	≦6
PCD	≦90	≦145	≦200	≦200	≦235	≦235	≦235	≦235
G	≦4-M6	≦4-M8	≦4-M12	≦4-M12	≦4-M12	≦4-M12	≦4-M12	≦4-M12
□E	≦80	≦120	≦176	≦176	≦200	≦200	≦200	≦200

* Detailed sizes of input shaft and flange C1~C7 are on page 57

AATM Series

RF Big Hollow Shaft Rotary Flange Type

*AATM070AS~AATM320AS: Ratio(1/2~1/10)

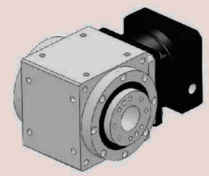

Dimensions: Unit:mm

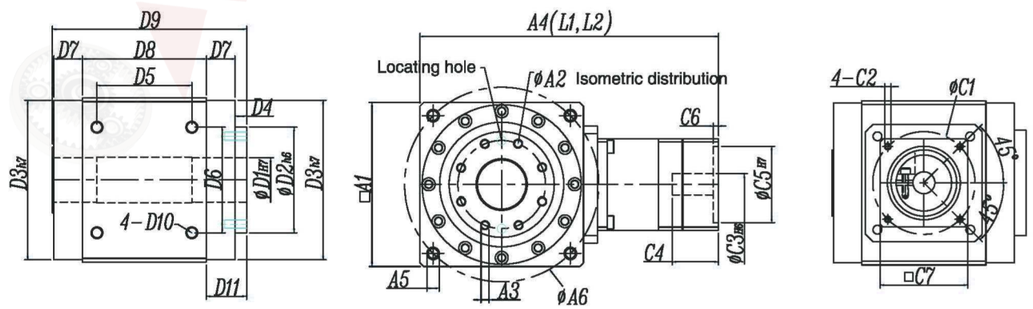

P.S:A6 (Optional through hole)

Specifications: Unit:mm

Sizes	AATM070AS	AATM080AS	AATM110AS	AATM135AS	AATM165AS	AATM200BS	AATM320AS
A1	70	80	110	138	168	200	320
A2	30	36	50	70	95	124	193
A3	6-M5-10L	8-M5-10L	8-M5-15L	8-M8-15L	8-M8-15L	12-M8-15L	12-M14-25L
A4	146.5	157.7	192.5	244.5	278	312	491.5
A5	4-M5-10L	4-M6-12L	4-M8-15L	4-M10-18L	4-M12-20L	4-M16-30L	4-M20-35L
A6	75	93	130	160	193	240	380
D1	16	20	30	40	55	80	110
D2	38	45	65	85	110	140	220
D3	60	78	106	133	163	195	306
D4	8.25	7	9.5	9.5	17	22	17.5
D5	42.43	49.5	68	86	106	129	170
D6	42.43	49.5	65	83	105	130	220
D7	6.25	13	15	10	13	22	30
D8	70	67	90	120	142	155	236
D9	92.25	102	131.5	151.5	187	223	316.5
D10	4-M5-10L	4-M6-12L	4-M8-15L	4-M10-18L	4-M14-16L	4-M14-20L	6-M20-30L
D11	14.5	20	24.5	19.5	30	44	47.5
C1	≦70	≦90	≦145	≦200	≦215	≦215	≦450
C2	≦M5	≦M6	≦M8	≦M12	≦M12	≦M12	≦M18
C3	≦14	≦19	≦24	≦35	≦42	≦42	≦65
C4	≦31	≦41	≦62	≦80	≦116	≦116	≦135
C5	≦50	≦70	≦110	≦114.3	≦180	≦180	≦350
C6	≦3.5	≦3.5	≦7	≦7	≦7	≦7	≦7
C7	≦62	≦80	≦120	≦180	≦200	≦200	≦400

* Detailed sizes of input shaft and flange C1~C7 are on page 57

AATM Series

RFHP Hollow Shaft Tight Ring Type

*AATM080AS~AATM320AS: Ratio(1/2~1/10)

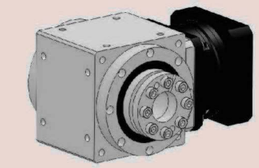

Dimensions: Unit:mm

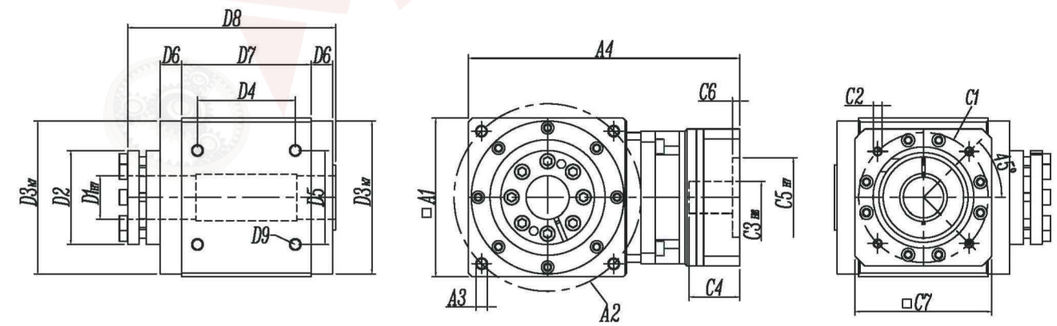

*A2:Optional through hole

Specifications: Unit:mm

Sizes	AATM080AS	AATM110AS	AATM135AS	AATM165AS	AATM200BS	AATM320AS
A1	80	110	138	168	200	320
A2	93	130	160	193	240	380
A3	4-M6-12L	4-M8-12L	4-M10-15L	4-M12-18L	4-M16-30L	4-M20-35L
A4	157.7	192.5	244.5	278	312	491.5
D1	20	30	40	55	65	105
D2	45	65	85	110	140	170
D3	78	106	133	163	195	306
D4	49.5	68	86	106	129	170
D5	49.5	65	83	105	130	220
D6	13	15	10	13	22	30
D7	67	90	120	142	155	236
D8	113	144.5	173.5	206	243.5	302
D9	4-M6-12L	4-M8-15L	4-M10-18L	4-M14-16L	4-M14-25L	4-M20-30L
C1	≦90	≦145	≦145	≦200	≦215	≦450
C2	≦M6	≦M8	≦M8	≦M12	≦M12	≦M18
C3	≦19	≦24	≦24	≦35	≦42	≦65
C4	≦41	≦62	≦62	≦80	≦116	≦135
C5	≦70	≦110	≦110	≦114.3	≦180	≦350
C6	≦5	≦7	≦7	≦7	≦7	≦7
C7	≦80	≦120	≦120	≦176	≦196	≦400

* Detailed sizes of input shaft and flange C1~C7 are on page 57

AATM Series

CR Hollow Shaft Key Groove Type

*AATM080AS~AATM200BS: Ratio(1/2~1/10)

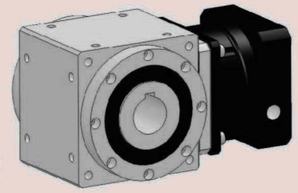

Dimensions:

Unit:mm

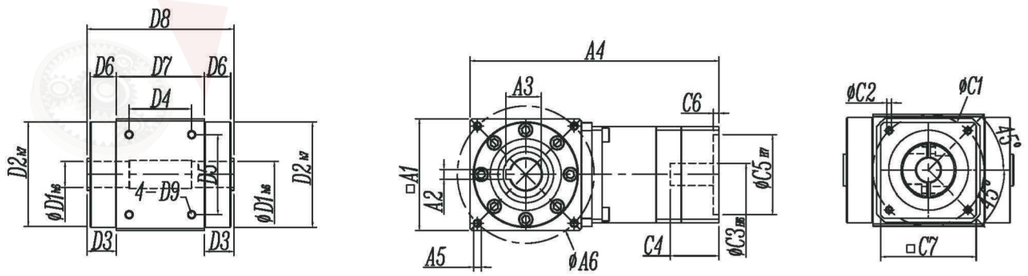

*A6:Optional through hole

Specifications:

Unit:mm

Sizes	AATM080AS	AATM110AS	AATM135AS	AATM165AS	AATM200BS
A1	80	110	138	168	200
A2	6	8	12	14	18
A3	22.7	33.3	43.3	58.8	84.4
A4	157.7	192.5	244.5	278	312
A5	4-M6-12L	4-M8-12L	4-M10-15L	4-M12-18L	4-M16-30L
A6	93	130	160	193	240
D1	20	30	40	55	75
D2	78	106	133	163	195
D3	14.25	17	13	15	23.5
D4	49.5	68	86	106	129
D5	49.5	65	83	105	130
D6	13	15	10	13	22
D7	67	90	120	142	155
D8	96.5	124	146	170	202
D9	4-M6-12L	4-M8-15L	4-M10-18L	4-M14-16L	4-M14-25L
C1	≦90	≦145	≦145	≦200	≦215
C2	≦M6	≦M8	≦M8	≦M12	≦M12
C3	≦19	≦24	≦24	≦35	≦42
C4	≦41	≦62	≦62	≦80	≦116
C5	≦70	≦110	≦110	≦114.3	≦180
C6	≦5	≦7	≦7	≦7	≦7
C7	≦80	≦120	≦120	≦176	≦196

* Detailed sizes of input shaft and flange C1~C7 are on page 57

AATM Series

2P Double Output Shaft Type

*AATM080AS~AATM200BS: Ratio(1/2~1/10)

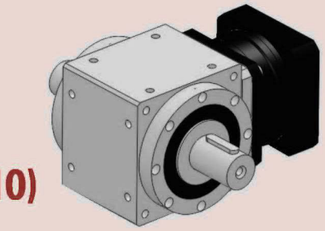

Dimensions:

Unit:mm

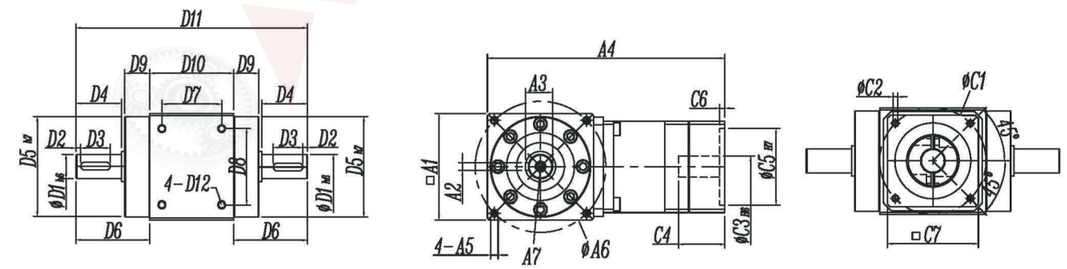

*A6:Optional through hole

Specifications:

Unit:mm

Sizes	AATM080AS	AATM110AS	AATM135AS	AATM165AS	AATM200BS
A1	80	110	138	168	200
A2	6	8	12	16	20
A3	22.5	33	43	59	79.5
A4	157.7	192.5	244.5	278	312
A5	4-M6-12L	4-M8-12L	4-M10-15L	4-M12-18L	4- M16-30L
A6	93	130	160	193	240
A7	M6	M8	M12	M16	M20
D1	20	30	40	55	75
D2	5	5	5	3	5
D3	25	35	45	70	90
D4	35	45	55	80	100
D5	78	106	133	163	195
D6	49.75	62	68	95	123.5
D7	49.5	68	86	106	129
D8	49.5	65	83	105	130
D9	13	15	10	13	22
D10	67	90	102	130	155
D11	166.5	214	256	332	402
D12	4-M6-12L	4-M8-15L	4-M10-18L	4-M14-16L	4-M14-25L
C1	≦90	≦145	≦145	≦200	≦215
C2	≦M6	≦M8	≦M8	≦M12	≦M12
C3	≦19	≦24	≦24	≦35	≦42
C4	≦41	≦62	≦62	≦80	≦116
C5	≦70	≦110	≦110	≦114.3	≦180
C6	≦5	≦7	≦7	≦7	≦7
C7	≦80	≦120	≦120	≦176	≦196

* Detailed sizes of input shaft and flange C1~C7 are on page 57

AATM Series

P Single Output Shaft Type

*AATM080~AATM320AS: Ratio(1/2~1/10)

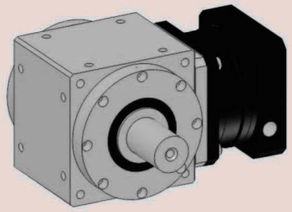

Dimensions: Unit:mm

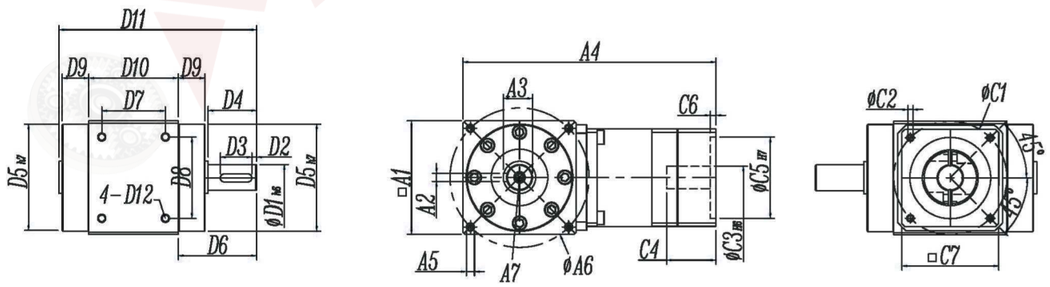

*A6:Optional through hole

Specifications: Unit:mm

Sizes	AATM080AS	AATM110AS	AATM135AS	AATM165AS	AATM200BS	AATM320AS
A1	80	110	138	168	200	320
A2	6	8	12	16	20	32
A3	22.5	33	43	59	79.5	127
A4	157.7	192.5	244.5	278	312	491.5
A5	4-M6-12L	4-M8-12L	4-M10-15L	4-M12-18L	4-M16-30L	4-M20-35L
A6	93	130	160	193	240	380
A7	M6	M8	M12	M16	M20	M20
D1	20	30	40	55	75	120
D2	5	5	5	3	5	15
D3	25	35	45	70	90	120
D4	35	45	55	80	100	150
D5	78	106	133	163	195	306
D6	49.75	62	68	95	123.5	183
D7	49.5	68	86	106	129	170
D8	49.5	65	83	105	130	220
D9	13	15	10	13	22	30
D10	67	90	120	142	155	155
D11	131.5	169	201	252	302	365
D12	4-M6-12L	4-M8-15L	4-M10-18L	4-M14-16L	4-M14-25L	4-M20-30L
C1	≦90	≦145	≦145	≦200	≦215	≦450
C2	≦M6	≦M8	≦M8	≦M12	≦M12	≦M18
C3	≦19	≦24	≦24	≦35	≦42	≦65
C4	≦41	≦62	≦62	≦80	≦116	≦135
C5	≦70	≦110	≦110	≦114.3	≦180	≦350
C6	≦5	≦7	≦7	≦7	≦7	≦7
C7	≦80	≦120	≦120	≦176	≦196	≦400

* Detailed sizes of input shaft and flange C1~C7 are on page 57

AAT Series

CR Hollow Shaft Key Groove Type

*AAT080AS~AAT200BS: Ratio(1/2,1/3)

*Ratio of Customized Product(1/5,1/10)

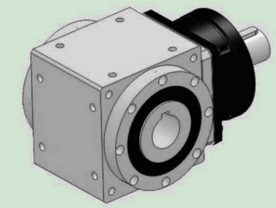

Dimensions: Unit:mm

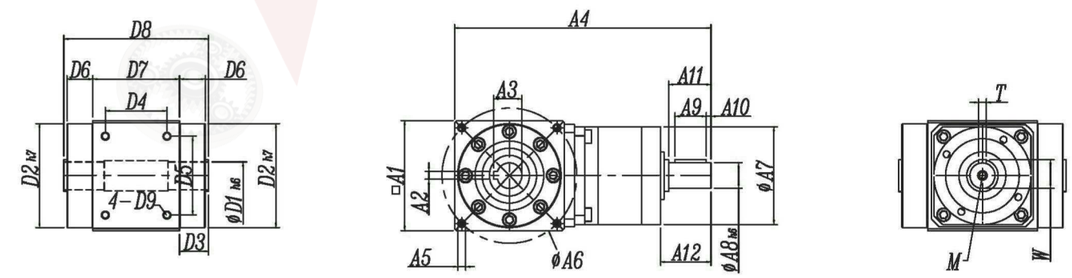

Specifications: Unit:mm

Sizes	AAT080AS	AAT110AS	AAT135AS	AAT165AS	AAT200BS
A1	80	110	138	168	200
A2	6	8	12	14	18
A3	22.7	33.3	43.3	58.8	84.4
A4	173.9	208.5	259.5	317	355
A5	4-M6-12L	4-M8-15L	4-M10-18L	4-M12-20L	4-M16-30L
A6	93	130	160	193	240
A7	62	95	120	142	142
A8	20	28	35	50	50
A9	20	30	40	50	50
A10	3	3	3	3	3
A11	27	34	45	65	65
A12	32.2	41	51.5	70	70
D1	20	30	40	55	75
D2	78	106	133	163	195
D3	14.75	17	13	15	23.5
D4	49.5	68	86	106	141
D5	49.5	65	83	105	130
D6	13	15	10	13	22
D7	67	90	120	142	155
D8	96.5	124	146	172	202
D9	4-M6-12L	4-M8-12L	4-M10-18L	4-M14-16L	4-M14-25L
T	6	8	10	14	14
W	22.5	31	38	53.5	53.5
M	M6	M8	M8	M12	M12

* Detailed sizes of input shaft and flange C1~C7 are on page 57

AAT Series

2P Double Output Shaft Type

*AAT080AS~AAT200BS: Ratio(1/2,1/3)

*Ratio of Customized Product(1/5,1/10)

Dimensions: Unit:mm

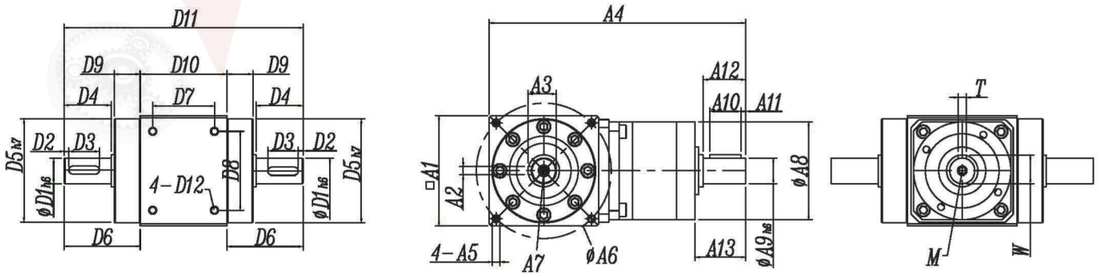

Specifications: Unit:mm

Sizes	AAT080AS	AAT110AS	AAT135AS	AAT165AS	AAT200BS
A1	80	110	138	168	200
A2	6	8	12	16	20
A3	22.5	33	43	59	79.5
A4	173.9	208.5	259.5	317	355
A5	4-M6-12L	4-M8-15L	4-M10-18L	4-M12-20L	4-M16-30L
A6	93	130	160	193	240
A7	M6	M8	M12	M16	M20
A8	62	95	120	142	142
A9	20	28	35	50	50
A10	20	30	40	60	60
A11	3	3	3	3	3
A12	27	40	45	65	65
A13	32.2	44	51.5	70	70
D1	20	30	40	55	75
D2	5	5	5	5	5
D3	25	35	45	70	90
D4	35	45	55	80	100
D5	78	106	133	163	195
D6	49.75	62	68	95	123.5
D7	49.5	68	86	106	141
D8	49.5	65	83	105	130
D9	13	15	10	13	22
D10	67	90	120	142	155
D11	166.5	214	256	332	402
D12	4-M6-12L	4- M8-12L	4-M10-18L	4-M14-16L	4-M14-25L
T	6	8	10	14	14
W	22.5	31	38	53.5	53.5
M	M6	M8	M8	M12	M12

* Detailed sizes of input shaft and flange C1~C7 are on page 57

AAT Series

P Single Output Shaft Type

*AAT080AS~AAT200BS: Ratio(1/2,1/3)

*Ratio of Customized Product(1/5,1/10)

Dimensions: Unit:mm

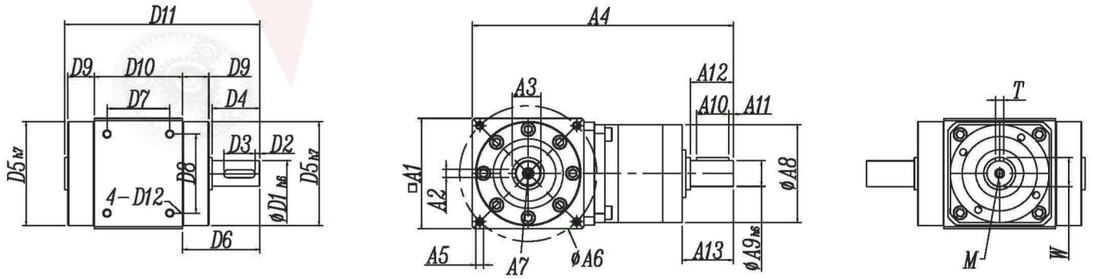

Specifications: Unit:mm

Sizes	AAT080AS$^{R}_{L}$	AAT110AS$^{R}_{L}$	AAT135AS$^{R}_{L}$	AAT165AS$^{R}_{L}$	AAT200BS$^{R}_{L}$
A1	80	110	135	165	200
A2	6	8	12	16	20
A3	22.5	33	43	59	79.5
A4	173.9	208.5	222	317	355
A5	4-M6-12L	4-M8-15L	4-M10-18L	4-M12-20L	4-M16-30L
A6	93	130	160	193	240
A7	M6	M8	M12	M16	M20
A8	62	95	120	142	142
A9	20	28	35	50	50
A10	20	30	40	60	60
A11	3	3	3	3	3
A12	27	40	45	65	65
A13	32.2	44	51.5	75	70
D1	20	30	40	55	75
D2	5	5	5	5	5
D3	25	35	45	70	90
D4	35	45	55	80	100
D5	78	106	133	163	195
D6	49.75	62	68	95	110
D7	49.5	68	86	106	141
D8	49.5	65	83	105	130
D9	13	15	10	13	22
D10	67	90	120	142	155
D11	131.5	169	201	252	302
D12	4-M6-12L	4- M8-12L	4-M10-18L	4-M14-16L	4-M14-25L
T	6	8	10	14	14
W	22.5	31	38	53.5	53.5
M	M6	M8	M8	M12	M12

* Detailed sizes of input shaft and flange C1~C7 are on page 57

AAW–AS(BS) / AAT(M) Series

Detailed Sizes Diagram of Input End

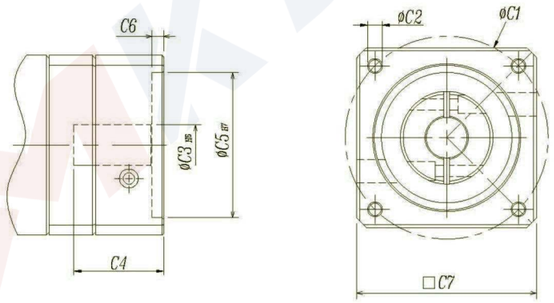

* Detailed sizes of input shaft and flange C1~C7
* Motor code refers to the sizes of input end of different brands
* Special products: the sizes of input flange can be made according to the customer's specifications

Model	AAW070AS/AATM080AS/AAW080AS								AATM110AS/AAW110AS/AAW135BS										
Sizes / Motor code	S1	S2	S3	S4	S5	S6	S7	S8	S1	S2	S3	S4	S5	S6	S7	S8	S9	S10	S11
C1	45	46	70	70	70	90	90	66.7	70	70	70	90	90	90	90	100	145	145	145
C2	M3	M4	M4	M4	M5	M5	M6	M4	M4	M4	M5	M5	M6	M6	M6	M6	M8	M8	M8
C3 H6	8	8	11	14	14	14	14	6.35	11	14	14	14	14	16	19	16	19	22	24
C4	31	31	31	31	31	31	31	31	41	41	41	41	41	41	41	41	58	58	58
C5 H7	30	30	50	50	50	70	70	38.1	50	50	50	70	70	70	70	80	110	110	110
C6	3.5	3.5	3.5	3.5	3.5	3.5	3.5	3.5	5	5	5	5	5	5	5	5	5	5	5
C7	62	62	62	62	62	80	80	62	90	90	90	90	90	90	90	90	130	130	130

Model	AATM135AS/AAW135AS/AAW165BS										AATM165AS/AAW165AS/AATM200BS/AAW200BS							
Sizes / Motor code	S1	S2	S3	S4	S5	S6	S7	S8	S9	S10	S1	S2	S3	S4	S5	S6	S7	S8
C1	90	90	100	115	115	130	145	145	145	145	115	115	145	145	145	145	200	165
C2	M6	M6	M6	M6	M8	M8	M8	M8	M8	M8	M6	M8	M8	M8	M8	M8	M12	M10
C3 H6	16	19	16	24	24	19	19	22	24	28	24	24	19	22	24	28	35	32
C4	54	54	54	54	54	62	62	62	62	63	60	60	65	65	65	65	81	65
C5 H7	70	70	80	95	95	110	110	110	110	110	95	95	110	110	110	110	114.3	130
C6	7	7	7	7	7	7	7	7	7	7	7	7	7	7	7	7	7	7
C7	120	120	120	120	120	120	120	120	120	120	142	142	142	142	142	142	176	142

Model	AAW200AS/AAW320BS											AAW320AS						
Sizes / Motor code	S1	S2	S3	S4	S5	S6	S7	S8	S9	S10	S11	S1	S2	S3	S4	S5	S6	S7
C1	145	145	145	115	200	200	165	215	235	235	265	200	200	215	215	235	235	265
C2	M8	M8	M8	M6	M12	M12	M10	M12	M12	M12	M10	M12	M12	M12	M12	M12	M12	M12
C3 H6	19	22	24	28	35	42	32	38	42	55	55	35	42	38	42	42	55	55
C4	75	75	75	75	81	81	81	116	116	116	116	116	116	116	116	116	116	116
C5 H7	110	110	110	110	114.3	114.3	130	180	200	200	230	114.3	114.3	180	180	200	200	230
C6	10	10	10	10	10	10	10	10	10	10	10	10	10	10	10	10	10	10
C7	180	180	180	180	180	180	180	192	220	220	250	220	220	220	220	200	200	250

* Detailed sizes of input shaft and flange C1~C7 are on page 57

Installation Instruction of Reducer & Motor

Step 1: Confirm the specs of the motor and reducer, and wipe the mounting surface of the motor and reducer clean.

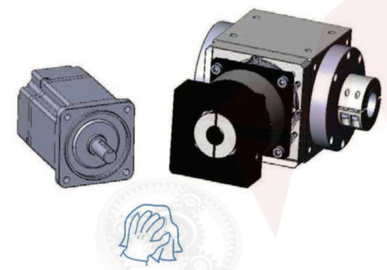

Step 2: Remove the original key on the motor.

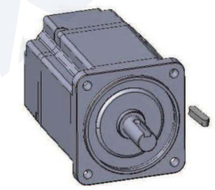

Step 3: Add sleeves if necessary.

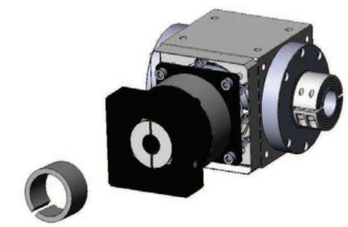

Step 4: Vertically mount motor with the recommended torsion value of 5% in the screw torsion value table (Table 1), according to the order of 1-4, the screw with gasket is lightly locked with a wrench.

Step5: Put the motor and reducer vertically. Refer to the recommended torsion value in Table 2 and lock the embedding bolt with a torsion wrench

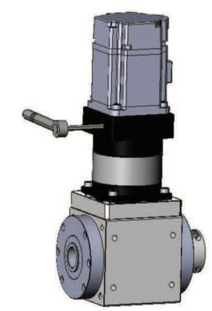

Step 6: Put the motor and reducer vertically, and lock the screw with the recommended torsion value of the screw torsion table (Table 1) according to the order of 1 ~ 4.

Table 1	Recommendation Table of Motor Locking Screw Torque						
Screw size	Hex head size [mm]	Strength 8.8 screw locking force [Nm]	[In-lbs]	Strength 10.9 screw locking force [Nm]	[In-lbs]	Strength 12.9 screw locking force [Nm]	[In-lbs]
M3×0.5 P	2.5	1.3	12	1.8	16	2.1	19
M4×0.7P	3	3	27	4.1	37	4.9	44
M5× 0.8P	4	6.1	55	8.2	73	9.8	87
M6×1P	5	11	98	14	124	17	151
M8×1.25P	6	25	222	34	302	41	364
M10×1.5P	8	49	434	67	594	80	709
M12×1.75P	10	85	753	116	1028	139	1232
M14×2P	12	137	1214	186	1648	223	1976
M16×2P	14	210	1860	286	2534	343	3038

AATM080AS~200BS-2AX-□-CR-S□

***2AX: 2 Shaft type**

***□: Ratio(1/2,1/3),Customized Product(1/5,1/10)**

***S□: S1~S11(Sizes Code of Input End)**

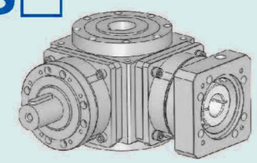

Dimensions:

Unit:mm

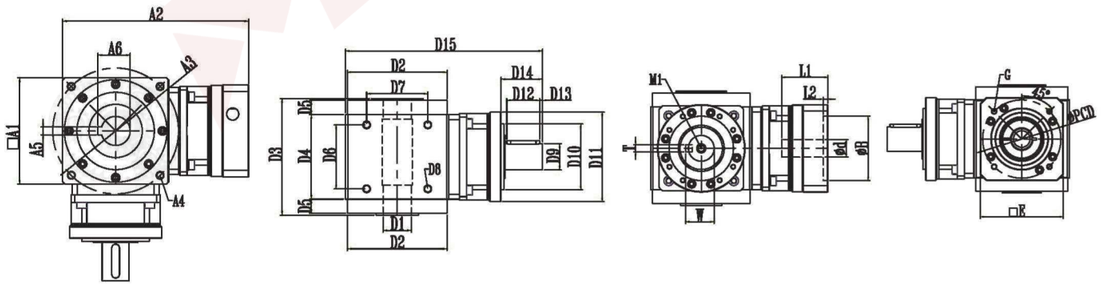

Specifications:

Unit:mm

Sizes	AATM080AS-2AX	AATM110AS-2AX	AATM135AS-2AX	AATM165AS-2AX	AATM200BS-2AX
□A1	80	110	138	168	200
A2	157.7	192.5	244.5	278	312
A3	93	130	160	193	240
A4	4-M6-12L	4-M8-15L	4-M10-18L	4-M12-20L	4-M16-30L
A5	6	8	12	14	16
A6	22.7	33.3	43.3	58.8	74.3
ø D1 H7	20	30	40	55	70
ø D2 h7	78	106	133	163	195
D3	96	124	146	172	202
D4	67	90	120	142	155
D5	13	15	10	13	22
D6	49.5	68	86	106	129
D7	49.5	65	83	105	130
D8	4-M6-12L	4-M8-15L	4-M10-18L	4-M14-16L	4-M14-25L
ø D9 h6	20	28	35	50	50
ø D10		70	110	110	110
ø D11	62	95	120	142	142
D12	20	35	40	60	60
D13	3	3	3	3	3
D14	32.2	44	51.5	75	75
D15	173.9	209.5	259.5	317	355
T	6	8	12	14	14
W	22.5	31	43.3	53.5	53.5
M1	M6	M8	M10	M12	M12
ød H6	≤19	≤24	≤35	≤42	≤42
øB H7	≤70	≤110	≤114.3	≤180	≤180
L1	≤41	≤60	≤80	≤116	≤116
L2	≤5	≤6	≤6	≤6	≤6
PCD	≤90	≤145	≤200	≤235	≤235
G	≤4-M6	≤4-M8	≤4-M12	≤4-M12	≤4-M12
□E	≤80	≤120	≤176	≤200	≤200

* Detailed sizes of input shaft and flange C1~C7 are on page 57

AATM080AS~200BS-2AX-□-CR-S□

***2AX: 2 Shaft type**

***□: Ratio(1/2,1/3),Customized Product(1/5,1/10)**

***S□: S1~S11(Sizes Code of Input End)**

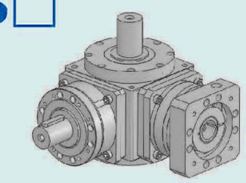

Dimensions:

Unit:mm

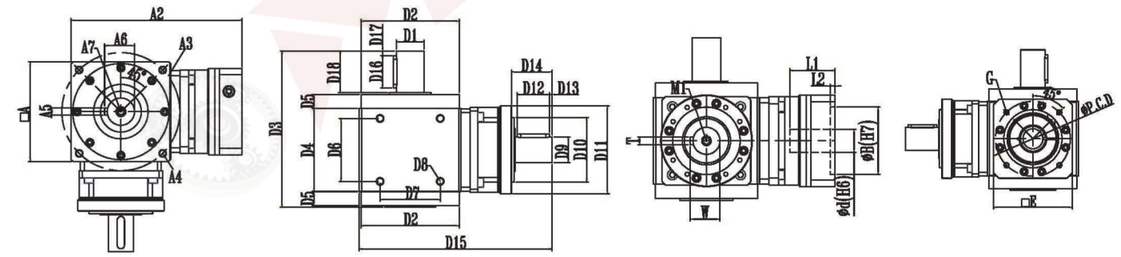

Specifications:

Unit:mm

Sizes	AATM080AS-2AX	AATM110AS-2AX	AATM135AS-2AX	AATM165AS-2AX	AATM200BS-2AX
□A1	80	110	138	168	200
A2	157.7	192.5	244.5	278	312
A3	93	130	160	193	240
A4	4-M6-12L	4-M8-15L	4-M10-18L	4-M12-20L	4-M16-30L
A5	6	8	12	16	20
A6	22.5	33	43	59	79.5
ø D1 H7	20	30	40	55	75
ø D2 h7	78	106	133	163	195
D3	131.5	169	201	252	302
D4	67	90	120	142	155
D5	13	15	10	13	22
D6	49.5	68	86	106	129
D7	49.5	65	83	105	130
D8	4-M6-12L	4-M8-15L	4-M10-18L	4-M14-16L	4-M14-25L
ø D9 h6	20	28	35	50	50
ø D10		70	110	110	110
ø D11	62	95	120	142	142
D12	20	35	40	60	60
D13	3	3	3	3	3
D14	32.2	44	51.5	75	75
D15	173.9	209.5	222	317	355
D16	25	35	45	70	90
D17	2	5	5	3	5
D18	35	45	55	80	100
T	6	8	12	14	14
W	22.5	31	43.3	53.5	53.5
M1	M6	M8	M10	M12	M12
ød H6	≤19	≤24	≤35	≤42	≤42
øB H7	≤70	≤110	≤114.3	≤180	≤180
L1	≤41	≤60	≤80	≤116	≤116
L2	≤5	≤6	≤6	≤6	≤6
PCD	≤90	≤145	≤200	≤235	≤235
G	≤4-M6	≤4-M8	≤4-M12	≤4-M12	≤4-M12
□E	≤80	≤120	≤176	≤200	≤200

* Detailed sizes of input shaft and flange C1~C7 are on page 57